AVK & 3.662.211

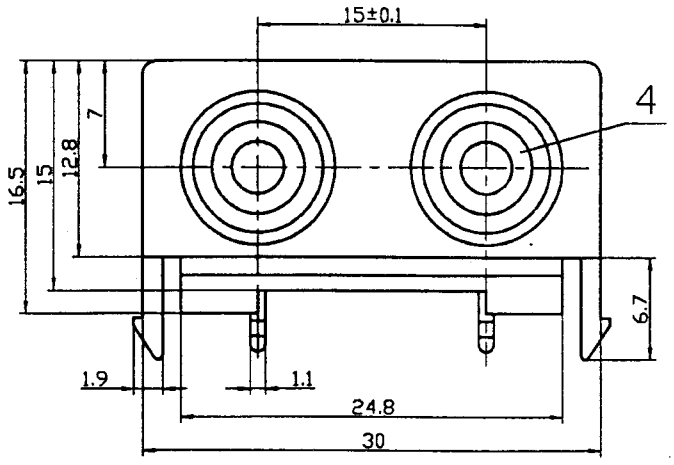

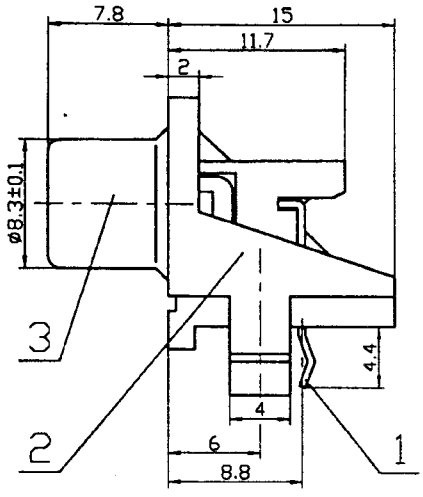

Dimensions of PC board hole
(Bottom View) ⊙

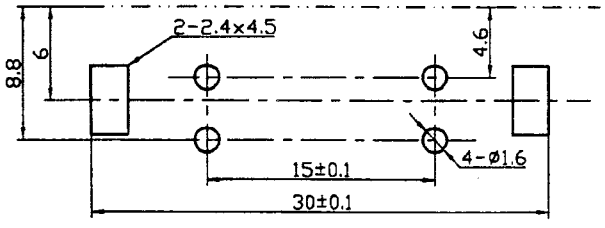

color Layout

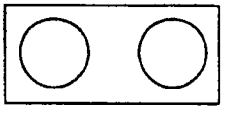

Circuit Diagram

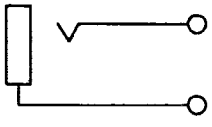

Specification:

1. This product should meet SONY(SS-00259) (Issue IV)and EU ROHS related requirement.
2. The surface of the plastic parts should be smooth and clean, without crack and burr and also,without shorting material problem.
3. The surface of the metal parts should be smooth and clean, without impress and scratch and oxidation and plating problem;
4. Electrical feature should be accordance with tech.spec.
5. Unspecified tolerance: 0~6: ±0.1
   >6~20: ±0.2
   >20: ±0.3

NO	Name	Qty	Material	Plating
4	Washer	2	ABS 94HB	——
3	Outer Conductor	2	H65 t=0.4	D.CuSn
2	Base	1	ABS 94HB	——
1	Pincer Needle	2	QSn6.5-0.1 t=0.5	D.CuSn

Number Of Old Base Map						
Number Of Base Map		Sign	Place Number	Changed Document Number	Signer	Date
		Designer	Yong Wan	Standardization		
Date	Signer	Verifier	Dong Li	Approved	Xiufang Bao	
		Verifier	Mengxian Yu			
		Technolgy		Date	2005.4.23	

RS-211

2P RCA JACK

Design Mark	Weight	Proportion
A	4.1g	2.5:1
1 piece together	the first piece	

DRAGON CITY INDUSTRIES LIMITED 龍豐實業有限公司