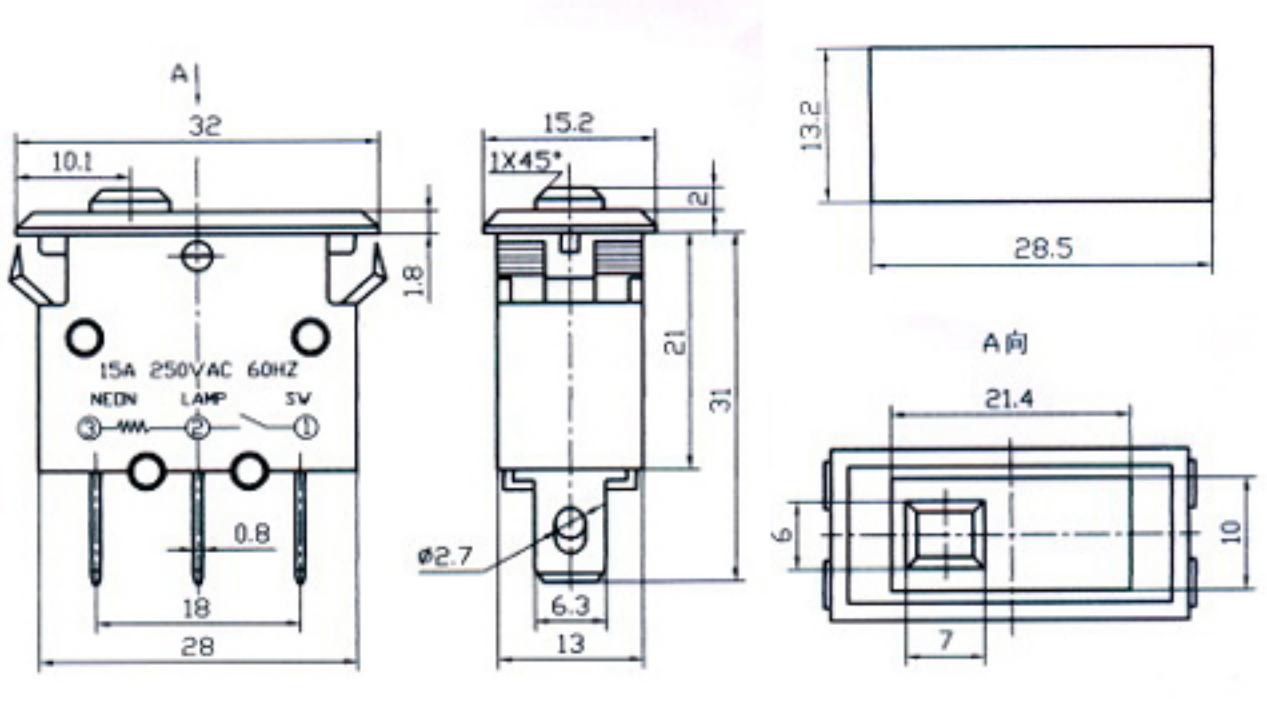
A
32
10.1
1.8
15A 250VAC 60HZ
NEON
LAMP
SW
③
②
①
0.8
18
28
15.2
1X45°
2
21
31
ø2.7
6.3
13
13.2
28.5
A向
21.4
6
10
7