DS9093RA, DS9093RB
iButton Plastic Card Mounts

www.maxim-ic.com

FEATURES

- Low-cost fixtures that hold an iButton® for thumbpad applications or permanent attachment to an object.
- Pre-punched hole mount for iButtons:
  - DS9093RA lock ring firmly fastens F5 package.
  - DS9093RB flange enlargement provides additional flange surface area if needed.

DS9093RA AND DS9093RB APPLICATION

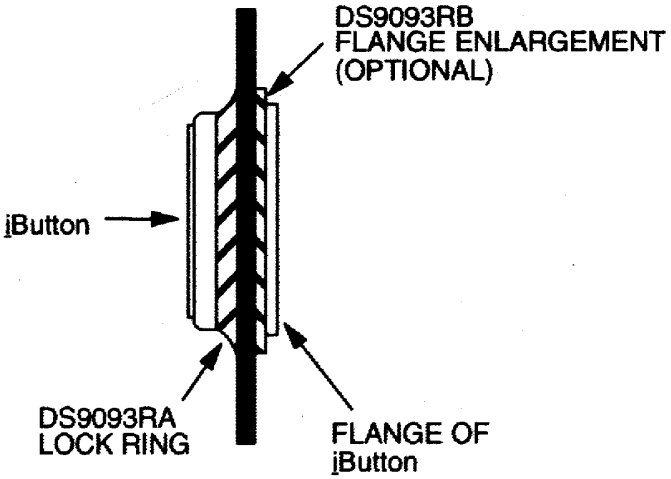

DS9093RA

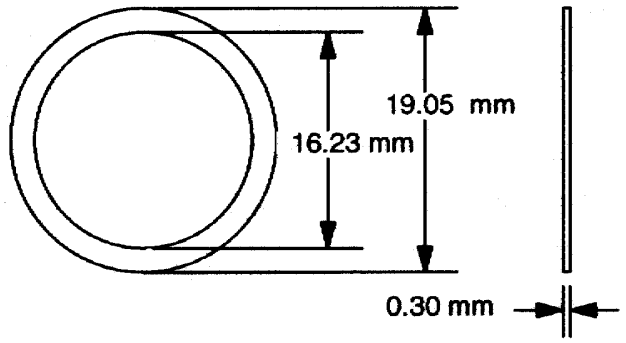

DS9093RB

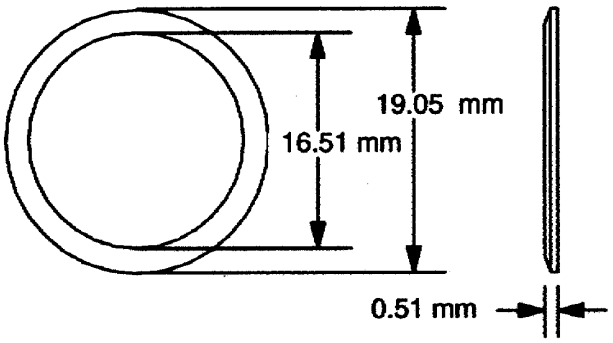

DESCRIPTION

The DS9093RA Lock Ring is a stainless-steel fastener that provides an inexpensive method for firmly attaching an iButton to any item with a pre-punched hole. The iButton is inserted through the hole and is restrained by the flange on the iButton. The DS9093RA Lock Ring is crimped onto the portion of the iButton that protrudes through the hole.

The optional DS9093RB Flange Enlargement is a thin, stainless-steel washer that provides additional surface area to improve retention of the iButton in materials that are very thin or flexible. The DS9093RB is formed with a slight dome to improve the gripping force exerted onto the pre-punched material. The domed side of the washer should face the flange of the iButton, the flat side should face the material.

iButton is a registered trademark of Dallas Semiconductor.