3-TERMINAL 1A POSITIVE VOLTAGE REGULATOR

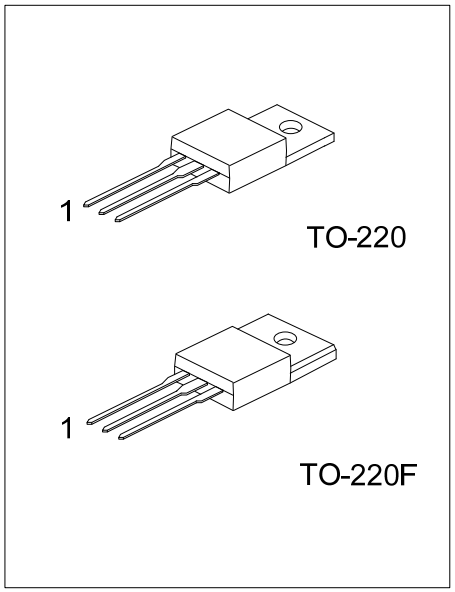

*Pb-free plating product number: LM78XXL

■ DESCRIPTION

The UTC **LM78XX** family is monolithic fixed voltage regulator integrated circuit. They are suitable for applications that required supply current up to 1 A.

■ FEATURES

* Output current up to 1A
* Fixed output voltage of 4.7V,5V, 6V, 7V, 8V, 9V, 10V, 12V, 15V, 18V and 24V available
* Thermal overload shutdown protection
* Short circuit current limiting
* Output transistor SOA protection

■ ORDERING INFORMATION

Order Number		Pin Assignment			Package	Packing
Normal	Lead Free Plating	1	2	3		
LM78xx-TA3-D-T	LM78xxL-TA3-D-T	I	G	O	TO-220	Tube
LM78xx-TF3-D-T	LM78xxL-TF3-D-T	I	G	O	TO-220F	Tube

Note: O: Output G: GND I: Input

LM78xxL-TA3-D-T (1)Packing Type (2)Pin Assignment (3)Package Type (4)Lead Plating (5)Output Voltage Code	(1) T: Tube (2) refer to Pin Assignment (3) TA3: TO-220, TF3: TO-220F (4) L: Lead Free Plating, Blank: Pb/Sn (5) xx: refer to Marking Information

■ MARKING INFORMATION

PACKAGE	VOLTAGE CODE	VOLTAGE CODE	MARKING
TO-220 TO-220F	47:4.7V 05:5.0V 06:6.0V 07:7.0V 08:8.0V 09:9.0V	10:10V 12:12V 15:15V 18:18V 24:24V	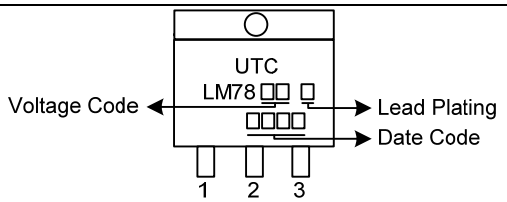

Copyright © 2008 Unisonic Technologies Co., Ltd

■ TEST CIRCUIT

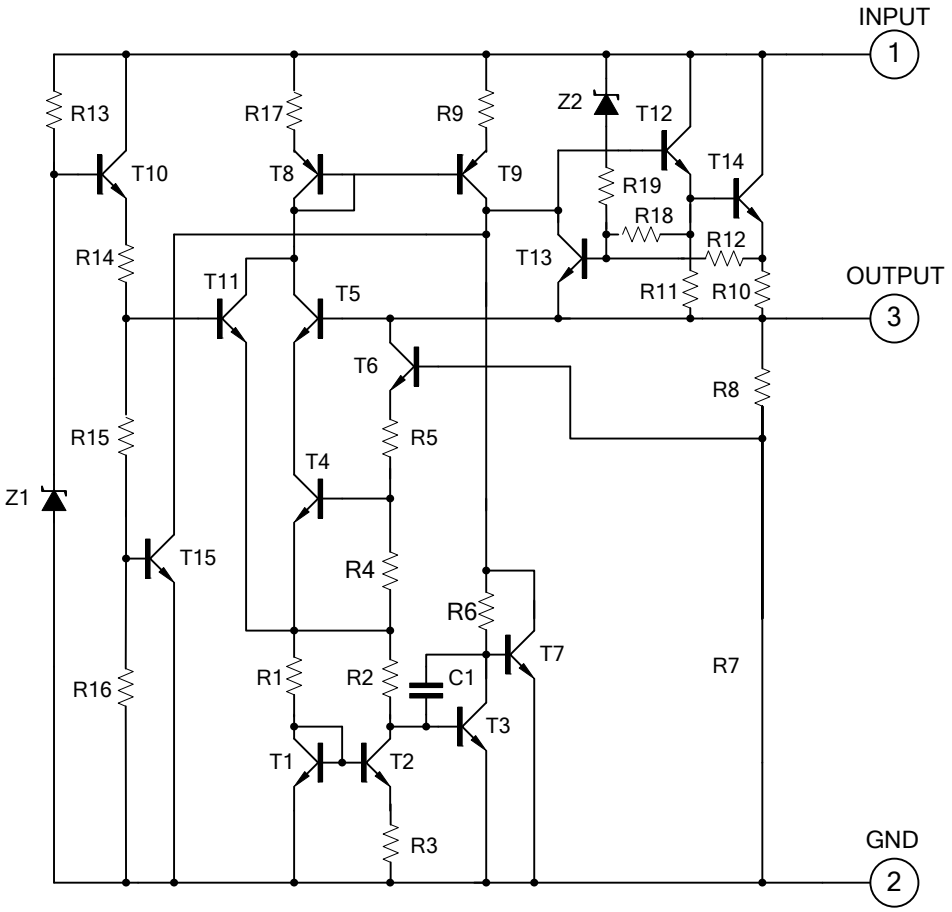

■ APPLICATION CIRCUIT

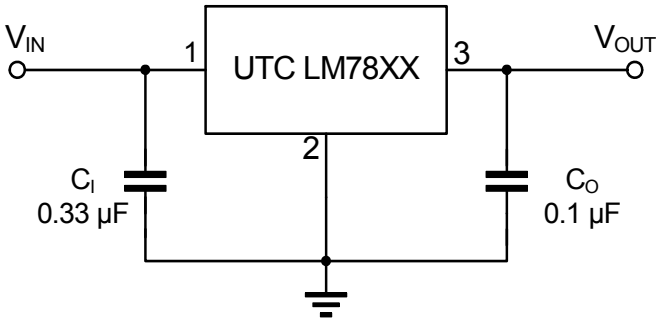

Note 1: To specify an output voltage, substitute voltage value for "XX".

2: Bypass capacitors are recommended for optimum stability and transient response and should be located as close as possible to the regulators.

■ ABSOLUTE MAXIMUM RATINGS

(Operating temperature range applies unless otherwise specified)

PARAMETER		SYMBOL	RATING	UNIT
Input voltage	V_{OUT}=4.7~18V	V_{IN}	35	V
	V_{OUT}=24V		40	V
Output Current		I_{OUT}	1	A
Power Dissipation		P_D	Internally Limited	W
Operating Junction Temperature		T_{OPR}	-20 ~ +150	°C
Storage Temperature		T_{STG}	-55 ~ +150	°C

Note: Absolute maximum ratings are those values beyond which the device could be permanently damaged.
Absolute maximum ratings are stress ratings only and functional device operation is not implied.

■ THERMAL DATA

PARAMETER	SYMBOL	RATING	UNIT
Thermal Resistance	θ_{JA}	65	°C/W
	θ_{JC}	5	°C/W

■ ELECTRICAL CHARACTERISTICS

(I_{OUT}=0.5A, T_J= 0°C - 125°C, C_I =0.33uF, C_O=0.1uF, unless otherwise specified)(Note 1)

For UTC LM7847 (V_{IN} =9.7V)

PARAMETER	SYMBOL	TEST CONDITIONS	MIN	TYP	MAX	UNIT
Output Voltage	V_{OUT}	T_J =25°C, I_{OUT}=5mA - 1.0A	4.512	4.70	4.888	V
		V_{IN} =7.2V ~ 19.7V, I_{OUT}=5mA - 1.0A, $P_D \leqq$ 15W	4.465		4.935	V
Dropout Voltage	V_D	T_J =25°C		2.0		V
Load Regulation	ΔV_{OUT}	T_J =25°C,I_{OUT}=5mA - 1.0A			47	mV
		T_J =25°C,I_{OUT}=0.25A - 0.75A			24	mV
Line regulation	ΔV_{OUT}	V_{IN} =7.2V ~ 19.7V, T_J =25°C			47	mV
		V_{IN} =7.2V ~ 19.7V, T_J =25°C, I_{OUT}=1.0A			47	mV
Quiescent Current	I_Q	T_J =25°C, $I_{OUT} \leqq$ 1.0A			8.0	mA
Quiescent Current Change	ΔI_Q	V_{IN} =7.2V ~ 19.7V			1.0	mA
		I_{OUT}=5mA - 1.0A			0.5	mA
Output Noise Voltage	eN	10Hz $\leqq$ f $\leqq$ 100kHz		40		μV
Temperature Coefficient of Vo	ΔVo/ΔT	I_{OUT}=5mA		-0.6		mV/°C
Ripple Rejection	RR	V_{IN} =7.7V -17.7V, f=120Hz, T_J =25°C	62	80		dB
Peak Output Current	I_{PEAK}	T_J =25°C		1.8		A
Short-Circuit Current	I_{SC}	V_{IN} =35V, T_J =25°C		250		mA

For UTC LM7805 (V_{IN} =10V)

PARAMETER	SYMBOL	TEST CONDITIONS	MIN	TYP	MAX	UNIT
Output Voltage	V_{OUT}	T_J =25°C, I_{OUT}=5mA - 1.0A	4.80	5.0	5.20	V
		V_{IN} =7.5V ~ 20V, I_{OUT}=5mA - 1.0A,$P_D \leqq$ 15W	4.75		5.25	V
Dropout Voltage	V_D	T_J =25°C		2.0		V
Load Regulation	ΔV_{OUT}	T_J =25°C,I_{OUT}=5mA - 1.0A			50	mV
		T_J =25°C,I_{OUT}=0.25A - 0.75A			25	mV
Line regulation	ΔV_{OUT}	V_{IN} =7V ~ 25V, T_J =25°C			50	mV
		V_{IN} =7.5V ~ 20V, T_J =25°C, I_{OUT}=1.0A			50	mV
Quiescent Current	I_Q	T_J =25°C, $I_{OUT} \leqq$ 1.0A			8.0	mA
Quiescent Current Change	ΔI_Q	V_{IN} =7.5V ~ 20V			1.0	mA
		I_{OUT}=5mA - 1.0A			0.5	mA
Output Noise Voltage	eN	10Hz $\leqq$ f $\leqq$ 100kHz		40		μV
Temperature Coefficient of Vo	ΔVo/ΔT	I_{OUT}=5mA		-0.6		mV/°C
Ripple Rejection	RR	V_{IN} =8V - 18V,f=120Hz, T_J =25°C	62	80		dB
Peak Output Current	I_{PEAK}	T_J =25°C		1.8		A
Short-Circuit Current	I_{SC}	V_{IN} =35V, T_J =25°C		250		mA

■ ELECTRICAL CHARACTERISTICS(Cont.)

For UTC LM7806 (V_{IN} =11V)

PARAMETER	SYMBOL	TEST CONDITIONS	MIN	TYP	MAX	UNIT
Output Voltage	V_{OUT}	T_J =25°C, I_{OUT}=5mA - 1.0A	5.76	6.0	6.24	V
		V_{IN} =8.5V ~ 21V, I_{OUT}=5mA - 1.0A, $P_D \leqq$ 15W	5.70		6.30	V
Dropout Voltage	V_D	T_J =25°C		2.0		V
Load Regulation	ΔV_{OUT}	T_J =25°C,I_{OUT}=5mA - 1.0A			60	mV
		T_J =25°C,I_{OUT}=0.25A - 0.75A			30	mV
Line regulation	ΔV_{OUT}	V_{IN} =8V ~ 25V, T_J =25°C			60	mV
		V_{IN} =8.5V ~ 21V, T_J =25°C,I_{OUT}=1.0A			60	mV
Quiescent Current	I_Q	T_J =25°C, $I_{OUT} \leqq$ 1.0A			8.0	mA
Quiescent Current Change	ΔI_Q	V_{IN} =8.5V ~ 21V			1.0	mA
		I_{OUT}=5mA - 1.0A			0.5	mA
Output Noise Voltage	eN	10Hz$\leqq$f$\leqq$100kHz		45		μV
Temperature Coefficient of Vo	ΔVo/ΔT	I_{OUT}=5mA		-0.7		mV/°C
Ripple Rejection	RR	V_{IN} =9V - 19V,f=120Hz, T_J =25°C	59	75		dB
Peak Output Current	I_{PEAK}	T_J =25°C		1.8		A
Short-Circuit Current	I_{SC}	V_{IN} =35V, T_J =25°C		250		mA

For UTC LM7807 (V_{IN} =13V)

PARAMETER	SYMBOL	TEST CONDITIONS	MIN	TYP	MAX	UNIT
Output Voltage	V_{OUT}	T_J =25°C, I_{OUT}=5mA - 1.0A	6.72	7.0	7.28	V
		V_{IN} =9.5V ~ 22V, I_{OUT}=5mA - 1.0A, $P_D \leqq$ 15W	6.65		7.35	V
Dropout Voltage	V_D	T_J =25°C		2.0		V
Load Regulation	ΔV_{OUT}	T_J =25°C,I_{OUT}=5mA - 1.0A			70	mV
		T_J =25°C,I_{OUT}=0.25A - 0.75A			35	mV
Line regulation	ΔV_{OUT}	V_{IN} =9V ~ 25V, T_J =25°C			70	mV
		V_{IN} =9.5V ~ 22V, T_J =25°C,I_{OUT}=1.0A			70	mV
Quiescent Current	I_Q	T_J =25°C, $I_{OUT} \leqq$ 1.0A			8.0	mA
Quiescent Current Change	ΔI_Q	V_{IN} =9.5V ~ 22V			1.0	mA
		I_{OUT}=5mA - 1.0A			0.5	mA
Output Noise Voltage	eN	10Hz$\leqq$f$\leqq$100kHz		50		μV
Temperature Coefficient of Vo	ΔVo/ΔT	I_{OUT}=5mA		-0.8		mV/°C
Ripple Rejection	RR	V_{IN} =10V - 20V,f=120Hz, T_J =25°C	59	75		dB
Peak Output Current	I_{PEAK}	T_J =25°C		1.7		A
Short-Circuit Current	I_{SC}	V_{IN} =35V, T_J =25°C		250		mA

■ ELECTRICAL CHARACTERISTICS(Cont.)

For UTC LM7808 (V_{IN} =14V)

PARAMETER	SYMBOL	TEST CONDITIONS	MIN	TYP	MAX	UNIT
Output Voltage	V_{OUT}	T_J =25°C, I_{OUT}=5mA - 1.0A	7.68	8.0	8.32	V
		V_{IN} =10.5V ~ 23V, I_{OUT}=5mA - 1.0A, $P_D \leqq$ 15W	7.60		8.40	V
Dropout Voltage	V_D	T_J =25°C		2.0		V
Load Regulation	ΔV_{OUT}	T_J =25°C,I_{OUT}=5mA - 1.0A			80	mV
		T_J =25°C,I_{OUT}=0.25A - 0.75A			40	mV
Line regulation	ΔV_{OUT}	V_{IN} =10.5V ~ 25V, T_J =25°C			80	mV
		V_{IN} =10.5V ~ 23V, T_J =25°C,I_{OUT}=1.0A			80	mV
Quiescent Current	I_Q	T_J =25°C, $I_{OUT} \leqq$ 1.0A			8.0	mA
Quiescent Current Change	ΔI_Q	V_{IN} =10.5V ~ 23V			1.0	mA
		I_{OUT}=5mA - 1.0A			0.5	mA
Output Noise Voltage	eN	10Hz$\leqq$f$\leqq$100kHz		58		μV
Temperature Coefficient of Vo	$\Delta Vo/\Delta T$	I_{OUT}=5mA		-0.9		mV/°C
Ripple Rejection	RR	V_{IN} =11.5V ~ 21.5V, f=120Hz, T_J =25°C	56	72		dB
Peak Output Current	I_{PEAK}	T_J =25°C		1.8		A
Short-Circuit Current	I_{SC}	V_{IN} =35V, T_J =25°C		250		mA

For UTC LM7809 (V_{IN} =15V)

PARAMETER	SYMBOL	TEST CONDITIONS	MIN	TYP	MAX	UNIT
Output Voltage	V_{OUT}	T_J =25°C, I_{OUT}=5mA - 1.0A	8.64	9.0	9.36	V
		V_{IN} =11.5V ~ 24V, I_{OUT}=5mA - 1.0A,$P_D \leqq$ 15W	8.55		9.45	V
Dropout Voltage	V_D	T_J =25°C		2.0		V
Load Regulation	ΔV_{OUT}	T_J =25°C,I_{OUT}=5mA - 1.0A			90	mV
		T_J =25°C,I_{OUT}=0.25A - 0.75A			45	mV
Line regulation	ΔV_{OUT}	V_{IN} =11.5V ~ 25 V, T_J =25°C			90	mV
		V_{IN} =11.5V ~ 24V, T_J =25°C, I_{OUT}=1.0A			90	mV
Quiescent Current	I_Q	T_J =25°C, $I_{OUT} \leqq$ 1.0A			8.0	mA
Quiescent Current Change	ΔI_Q	V_{IN} =11.5V ~ 24V			1.0	mA
		I_{OUT}=5mA – 1.0A			0.5	mA
Output Noise Voltage	eN	10Hz$\leqq$f$\leqq$100kHz		58		μV
Temperature Coefficient of Vo	$\Delta Vo/\Delta T$	I_{OUT}=5mA		-1.1		mV/°C
Ripple Rejection	RR	V_{IN} =12.5V ~ 22.5V,f=120Hz, T_J =25°C	56	72		dB
Peak Output Current	I_{PEAK}	T_J =25°C		1.8		A
Short-Circuit Current	I_{SC}	V_{IN} =35V, T_J =25°C		250		mA

■ ELECTRICAL CHARACTERISTICS(Cont.)

For UTC LM7810 (V_{IN} =16V)

PARAMETER	SYMBOL	TEST CONDITIONS	MIN	TYP	MAX	UNIT
Output Voltage	V_{OUT}	T_J =25°C, I_{OUT}=5mA - 1.0A	9.60	10.0	10.40	V
		V_{IN} =12.5V ~ 25V, I_{OUT}=5mA - 1.0A,P_D≦15W	9.50		10.50	V
Dropout Voltage	V_D	T_J =25°C		2.0		V
Load Regulation	ΔV_{OUT}	T_J =25°C,I_{OUT}=5mA - 1.0A			100	mV
		T_J =25°C,I_{OUT}=0.25A - 0.75A			50	mV
Line regulation	ΔV_{OUT}	V_{IN} =13V ~ 25V, T_J =25°C			100	mV
		V_{IN} =13V ~ 25V, T_J =25°C,I_{OUT}=1.0A			100	mV
Quiescent Current	I_Q	T_J =25°C, I_{OUT}≦1.0A			8.0	mA
Quiescent Current Change	ΔI_Q	V_{IN} =12.6V ~ 25V			1.0	mA
		I_{OUT}=5mA - 1.0A			0.5	mA
Output Noise Voltage	eN	10Hz≦f≦100kHz		58		μV
Temperature coefficient of Vo	ΔVo/ΔT	I_{OUT}=5mA		-1.1		mV/°C
Ripple Rejection	RR	V_{IN} =13V - 23V,f=120Hz, T_J =25°C	56	72		dB
Peak Output Current	I_{PEAK}	T_J =25°C		1.8		A
Short-Circuit Current	I_{SC}	V_{IN} =35V, T_J =25°C		250		mA

For UTC LM7812 (V_{IN} =19V)

PARAMETER	SYMBOL	TEST CONDITIONS	MIN	TYP	MAX	UNIT
Output Voltage	V_{OUT}	T_J =25°C, I_{OUT}=5mA - 1.0A	11.52	12.0	12.48	V
		V_{IN} =14.5V ~ 27V, I_{OUT}=5mA - 1.0A,P_D≦15W	11.40		12.60	V
Dropout Voltage	V_D	T_J =25°C		2.0		V
Load Regulation	ΔV_{OUT}	T_J =25°C,I_{OUT}=5mA - 1.0A			120	mV
		T_J =25°C,I_{OUT}=0.25A - 0.75A			60	mV
Line regulation	ΔV_{OUT}	V_{IN} =14.5V ~ 30V, T_J =25°C			120	mV
		V_{IN} =14.6V ~ 27V, T_J =25°C, I_{OUT}=1.0A			120	mV
Quiescent Current	I_Q	T_J =25°C, I_{OUT}≦1.0A			8.0	mA
Quiescent Current Change	ΔI_Q	V_{IN} =14.5V ~ 30V			1.0	mA
		I_{OUT}=5mA - 1.0A			0.5	mA
Output Noise Voltage	eN	10Hz≦f≦100kHz		75		μV
Temperature Coefficient of Vo	ΔVo/ΔT	I_{OUT}=5mA		-1.5		mV/°C
Ripple Rejection	RR	V_{IN} =15V - 25V,f=120Hz, T_J =25°C	55	72		dB
Peak Output Current	I_{PEAK}	T_J =25°C		1.8		A
Short-Circuit Current	I_{SC}	V_{IN} =35V, T_J =25°C		250		mA

■ ELECTRICAL CHARACTERISTICS(Cont.)

For UTC LM7815 (V_{IN} =23V)

PARAMETER	SYMBOL	TEST CONDITIONS	MIN	TYP	MAX	UNIT
Output Voltage	V_{OUT}	T_J =25°C, I_{OUT}=5mA - 1.0A	14.40	15.0	15.60	V
		V_{IN} =17.5V ~ 30V, I_{OUT}=5mA - 1.0A,P_D≦15W	14.25		15.75	V
Dropout Voltage	V_D	T_J =25°C		2.0		V
Load Regulation	ΔV_{OUT}	T_J =25°C,I_{OUT}=5mA - 1.0A			150	mV
		T_J =25°C,I_{OUT}=0.25A - 0.75A			75	mV
Line regulation	ΔV_{OUT}	V_{IN} =18.5V ~ 30V, T_J =25°C			150	mV
		V_{IN} =17.7V ~ 30V, T_J =25°C, I_{OUT} =1.0A			150	mV
Quiescent Current	I_Q	T_J =25°C, I_{OUT}≦1.0A			8.0	mA
Quiescent Current Change	ΔI_Q	V_{IN} =17.5V ~ 30V			1.0	mA
		I_{OUT}=5mA - 1.0A			0.5	mA
Output Noise Voltage	eN	10Hz≦f≦100kHz		90		μV
Temperature Coefficient of Vo	ΔVo/ΔT	I_{OUT}=5mA		-1.8		mV/°C
Ripple Rejection	RR	V_{IN} =18.5V ~ 28.5V,f=120Hz, T_J =25°C	54	70		dB
Peak Output Current	I_{PEAK}	T_J =25°C		1.8		A
Short-Circuit Current	I_{SC}	V_{IN} =35V, T_J =25°C		250		mA

For UTC LM7818 (V_{IN} =27V)

PARAMETER	SYMBOL	TEST CONDITIONS	MIN	TYP	MAX	UNIT
Output Voltage	V_{OUT}	T_J =25°C, I_{OUT}=5mA - 1.0A	17.28	18.0	18.72	V
		V_{IN} =21V ~ 33V, I_{OUT}=5mA - 1.0A, P_D≦15W	17.10		18.90	V
Dropout Voltage	V_D	T_J =25°C		2.0		V
Load Regulation	ΔV_{OUT}	T_J =25°C,I_{OUT}=5mA - 1.0A			180	mV
		T_J =25°C,I_{OUT}=0.25A - 0.75A			90	mV
Line regulation	ΔV_{OUT}	V_{IN} =21V ~ 33V,Tj=25°C			180	mV
		V_{IN} =21V ~ 33V, T_J =25°C, I_{OUT} =1.0A			180	mV
Quiescent Current	I_Q	T_J =25°C, I_{OUT}≦1.0A			8.0	mA
Quiescent Current Change	ΔI_Q	V_{IN} =21.5V ~ 33V			1.0	mA
		I_{OUT}=5mA - 1.0A			0.5	mA
Output Noise Voltage	eN	10Hz≦f≦100kHz		110		μV
Temperature Coefficient of Vo	ΔVo/ΔT	I_{OUT}=5mA		-2.2		mV/°C
Ripple Rejection	RR	V_{IN} =22V - 32V,f=120Hz, T_J =25°C	53	69		dB
Peak Output Current	I_{PEAK}	T_J =25°C		1.8		A
Short-Circuit Current	I_{SC}	V_{IN} =35V, T_J =25°C		250		mA

■ ELECTRICAL CHARACTERISTICS(Cont.)

For UTC LM7824 (V_{IN} =33V)

PARAMETER	SYMBOL	TEST CONDITIONS	MIN	TYP	MAX	UNIT
Output Voltage	V_{OUT}	T_J =25°C, I_{OUT}=5mA - 1.0A	23.04	24.0	24.96	V
		V_{IN} =27V ~ 38V, I_{OUT}=5mA - 1.0A, ,P_D≦15W	22.80		25.20	V
Dropout Voltage	V_D	T_J =25°C		2.0		V
Load Regulation	ΔV_{OUT}	T_J =25°C,I_{OUT}=5mA - 1.0A			240	mV
		T_J =25°C,I_{OUT}=0.25A - 0.75A			120	mV
Line regulation	ΔV_{OUT}	V_{IN} =27V ~ 38V, T_J =25°C			240	mV
		V_{IN} =27V ~ 38V, T_J =25°C,I_{OUT}=1.0A			240	mV
Quiescent Current	I_Q	T_J =25°C, I_{OUT}≦1.0A			8.0	mA
Quiescent Current Change	ΔI_Q	V_{IN} =28V ~ 38V			1.0	mA
		I_{OUT}=5mA - 1.0A			0.5	mA
Output Noise Voltage	eN	10Hz≦f≦100kHz		170		μV
Temperature Coefficient of Vo	ΔVo/ΔT	I_{OUT}=5mA		-2.8		mV/°C
Ripple Rejection	RR	V_{IN} =28V - 38V,f=120Hz, T_J =25°C	50	66		dB
Peak Output Current	I_{PEAK}	T_J =25°C		1.8		A
Short-Circuit Current	I_{SC}	V_{IN} =35V, T_J =25°C		250		mA

Note 1: The Maximum steady state usable output current are dependent on input voltage, heat sinking, lead length of the package and copper pattern of PCB. The data above represents pulse test conditions with junction temperatures specified at the initiation of test.

Note 2: Power dissipation<0.5W

■ TYPICAL CHARACTERISTICS

Ambient temperature vs. Power Dissipation

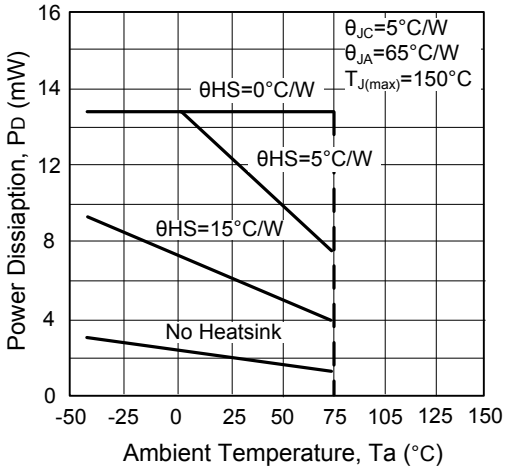

Output Voltage vs. Ambient Temperature

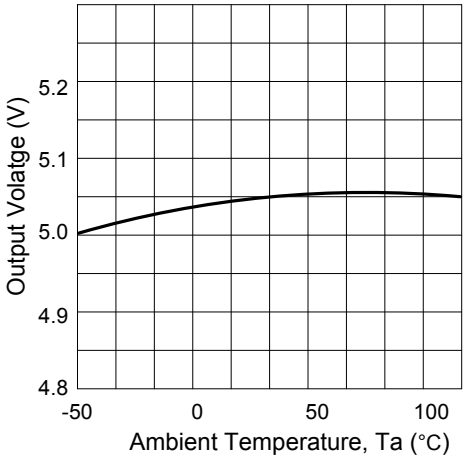

Dropout Voltage

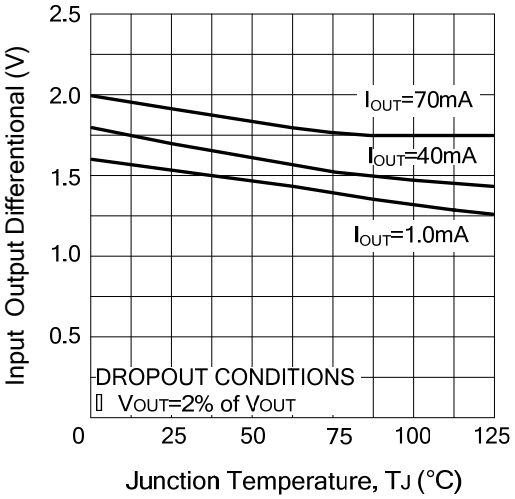

UTC assumes no responsibility for equipment failures that result from using products at values that exceed, even momentarily, rated values (such as maximum ratings, operating condition ranges, or other parameters) listed in products specifications of any and all UTC products described or contained herein. UTC products are not designed for use in life support appliances, devices or systems where malfunction of these products can be reasonably expected to result in personal injury. Reproduction in whole or in part is prohibited without the prior written consent of the copyright owner. The information presented in this document does not form part of any quotation or contract, is believed to be accurate and reliable and may be changed without notice.