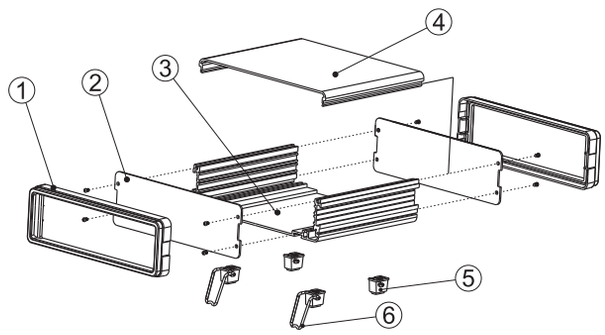

CODE	NAME OF PARTS	QUANTITY
1	Plastic bezel	2
2	Aluminum plate	2
3	Aluminum extruder top cover	1
4	Aluminum below panel	1
5	Plastic feet	4 (Sets)
6	Stainless steel supporting feet	2

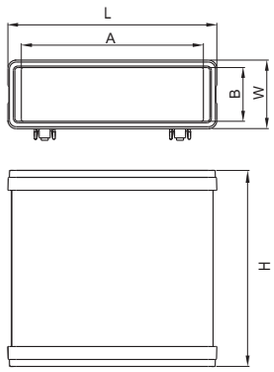

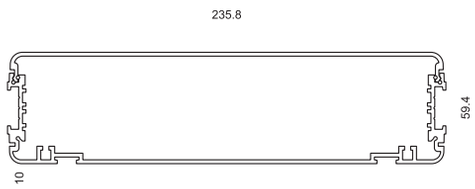

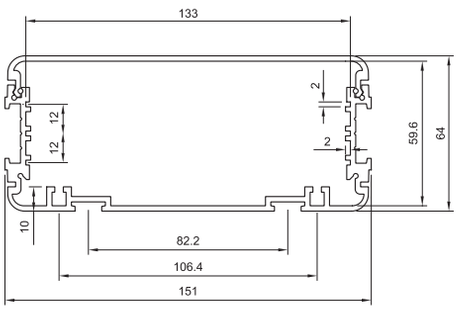

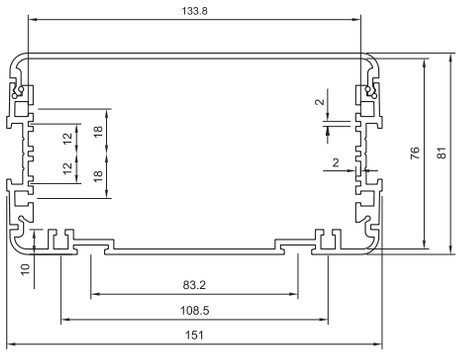
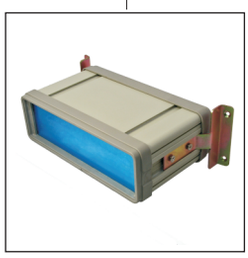
CODE				L × W	A × B	REMARK
17-1	17-01B	17-51	19-1	210 × 69	182 × 53	Depth(H) can be customized.
17-2	17-02B	17-52	19-2	258 × 69	231 × 53	
17-3	17-03B	17-53	19-3	210 × 125	182 × 110	
17-4	17-04B	17-54	19-4	258 × 102	231 × 87	
17-62				155 × 85	129 × 71	
17-63				155 × 70	129 × 55