STP9NK50Z - STP9NK50ZFP
STB9NK50Z

N-CHANNEL 500V - 0.72Ω - 7.2A TO-220/TO-220FP/D²PAK
Zener-Protected SuperMESH™ Power MOSFET

TYPE	V_{DSS}	$R_{DS(on)}$	I_D	Pw
STP9NK50Z	500 V	< 0.85 Ω	7.2 A	110 W
STP9NK50ZFP	500 V	< 0.85 Ω	7.2 A	30 W
STB9NK50Z	500 V	< 0.85 Ω	7.2 A	110 W

- TYPICAL R_{DS}(on) = 0.72 Ω
- EXTREMELY HIGH dv/dt CAPABILITY
- 100% AVALANCHE TESTED
- GATE CHARGE MINIMIZED
- VERY LOW INTRINSIC CAPACITANCES
- VERY GOOD MANUFACTURING REPEATIBILITY

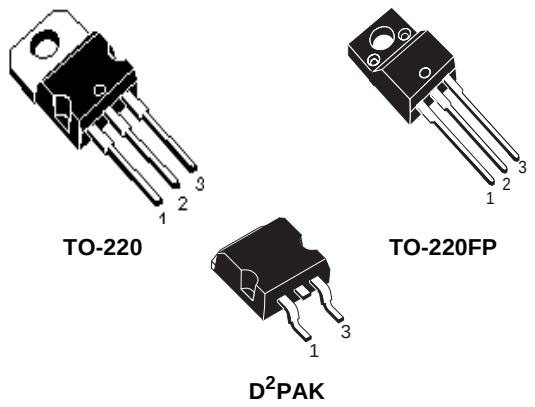

DESCRIPTION

The SuperMESH™ series is obtained through an extreme optimization of ST's well established strip-based PowerMESH™ layout. In addition to pushing on-resistance significantly down, special care is taken to ensure a very good dv/dt capability for the most demanding applications. Such series complements ST full range of high voltage MOSFETs including revolutionary MDmesh™ products.

INTERNAL SCHEMATIC DIAGRAM

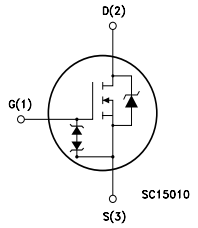

APPLICATIONS

- HIGH CURRENT, HIGH SPEED SWITCHING
- IDEAL FOR OFF-LINE POWER SUPPLIES, ADAPTORS AND PFC
- LIGHTING

ORDERING INFORMATION

SALES TYPE	MARKING	PACKAGE	PACKAGING
STP9NK50Z	P9NK50Z	TO-220	TUBE
STP9NK50ZFP	P9NK50ZFP	TO-220FP	TUBE
STB9NK50ZT4	B9NK50Z	D²PAK	TAPE & REEL

ABSOLUTE MAXIMUM RATINGS

Symbol	Parameter	Value		Unit
		STP9NK50Z STB9NK50Z	STP9NK50ZFP	
V_{DS}	Drain-source Voltage (V_{GS} = 0)	500		V
V_{DGR}	Drain-gate Voltage (R_{GS} = 20 kΩ)	500		V
V_{GS}	Gate- source Voltage	± 30		V
I_D	Drain Current (continuous) at T_C = 25°C	7.2	7.2 (*)	A
I_D	Drain Current (continuous) at T_C = 100°C	4.5	4.5 (*)	A
I_{DM} (•)	Drain Current (pulsed)	28.8	28.8 (*)	A
P_{TOT}	Total Dissipation at T_C = 25°C	110	30	W
	Derating Factor	0.88	0.24	W/°C
$V_{ESD(G-S)}$	Gate source ESD(HBM-C=100pF, R=1.5KΩ)	3500		V
dv/dt (1)	Peak Diode Recovery voltage slope	4.5		V/ns
V_{ISO}	Insulation Withstand Voltage (DC)	-	2500	V
T_j T_{stg}	Operating Junction Temperature Storage Temperature	-55 to 150 -55 to 150		°C °C

(•) Pulse width limited by safe operating area
(1) I_{SD} ≤7.2A, di/dt ≤200A/µs, $V_{DD} \leq V_{(BR)DSS}$, $T_j \leq T_{JMAX}$.
(*) Limited only by maximum temperature allowed

THERMAL DATA

		TO-220 D^2PAK	TO-220FP	
Rthj-case	Thermal Resistance Junction-case Max	1.14	4.2	°C/W
Rthj-amb	Thermal Resistance Junction-ambient Max	62.5		°C/W
T_l	Maximum Lead Temperature For Soldering Purpose	300		°C

AVALANCHE CHARACTERISTICS

Symbol	Parameter	Max Value	Unit
I_{AR}	Avalanche Current, Repetitive or Not-Repetitive (pulse width limited by T_j max)	7.2	A
E_{AS}	Single Pulse Avalanche Energy (starting T_j = 25 °C, I_D = I_{AR}, V_{DD} = 50 V)	190	mJ

GATE-SOURCE ZENER DIODE

Symbol	Parameter	Test Conditions	Min.	Typ.	Max.	Unit
BV_{GSO}	Gate-Source Breakdown Voltage	Igs=± 1mA (Open Drain)	30			V

PROTECTION FEATURES OF GATE-TO-SOURCE ZENER DIODES

The built-in back-to-back Zener diodes have specifically been designed to enhance not only the device's ESD capability, but also to make them safely absorb possible voltage transients that may occasionally be applied from gate to souce. In this respect the Zener voltage is appropriate to achieve an efficient and cost-effective intervention to protect the device's integrity. These integrated Zener diodes thus avoid the usage of external components.

ELECTRICAL CHARACTERISTICS (TCASE =25°C UNLESS OTHERWISE SPECIFIED)

ON/OFF

Symbol	Parameter	Test Conditions	Min.	Typ.	Max.	Unit
$V_{(BR)DSS}$	Drain-source Breakdown Voltage	I_D = 1 mA, V_{GS} = 0	500			V
I_{DSS}	Zero Gate Voltage Drain Current (V_{GS} = 0)	V_{DS} = Max Rating V_{DS} = Max Rating, T_C = 125 °C			1 50	µA µA
I_{GSS}	Gate-body Leakage Current (V_{DS} = 0)	V_{GS} = ± 20V			±10	µA
$V_{GS(th)}$	Gate Threshold Voltage	V_{DS} = V_{GS}, I_D = 100µA	3	3.75	4.5	V
$R_{DS(on)}$	Static Drain-source On Resistance	V_{GS} = 10V, I_D = 3.6 A		0.72	0.85	Ω

DYNAMIC

Symbol	Parameter	Test Conditions	Min.	Typ.	Max.	Unit
g_{fs} (1)	Forward Transconductance	V_{DS} = 15 V, I_D = 3.6 A		5.3		S
C_{iss} C_{oss} C_{rss}	Input Capacitance Output Capacitance Reverse Transfer Capacitance	V_{DS} = 25V, f = 1 MHz, V_{GS} = 0		910 125 30		pF pF pF
$C_{oss\ eq.}$ (3)	Equivalent Output Capacitance	V_{GS} = 0V, V_{DS} = 0V to 400V		75		pF

SWITCHING ON

Symbol	Parameter	Test Conditions	Min.	Typ.	Max.	Unit
$t_{d(on)}$ t_r	Turn-on Delay Time Rise Time	V_{DD} = 250 V, I_D = 3.6 A R_G = 4.7Ω V_{GS} = 10 V (Resistive Load see, Figure 3)		17 20		ns ns
Q_g Q_{gs} Q_{gd}	Total Gate Charge Gate-Source Charge Gate-Drain Charge	V_{DD} = 400V, I_D = 7.2 A, V_{GS} = 10V		32 6 18		nC nC nC

SWITCHING OFF

Symbol	Parameter	Test Conditions	Min.	Typ.	Max.	Unit
$t_{d(off)}$ t_f	Turn-off Delay Time Fall Time	V_{DD} = 250 V, I_D = 3.6 A R_G = 4.7Ω V_{GS} = 10 V (Resistive Load see, Figure 3)		45 22		ns ns
$t_{r(Voff)}$ t_f t_c	Off-voltage Rise Time Fall Time Cross-over Time	V_{DD} = 400V, I_D = 7.2 A, R_G = 4.7Ω, V_{GS} = 10V (Inductive Load see, Figure 5)		15 13 30		ns ns ns

SOURCE DRAIN DIODE

Symbol	Parameter	Test Conditions	Min.	Typ.	Max.	Unit
I_{SD} I_{SDM} (2)	Source-drain Current Source-drain Current (pulsed)				7.2 28.8	A A
V_{SD} (1)	Forward On Voltage	I_{SD} = 7.2 A, V_{GS} = 0			1.6	V
t_{rr} Q_{rr} I_{RRM}	Reverse Recovery Time Reverse Recovery Charge Reverse Recovery Current	I_{SD} = 7.2 A, di/dt = 100A/µs V_{DD} = 40 V, T_j = 150°C (see test circuit, Figure 5)		238 1.5 12.6		ns µC A

Note: 1. Pulsed: Pulse duration = 300 µs, duty cycle 1.5 %.
2. Pulse width limited by safe operating area.
3. $C_{oss\ eq.}$ is defined as a constant equivalent capacitance giving the same charging time as C_{oss} when V_{DS} increases from 0 to 80% V_{DSS}.

Safe Operating Area For TO-220/D2PAK

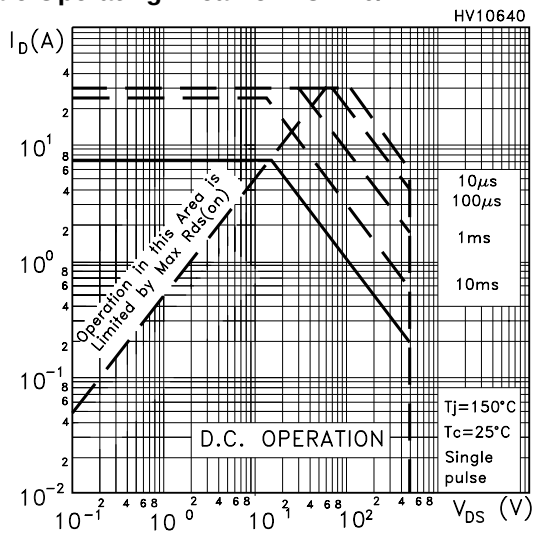

Thermal Impedance For TO-220/D2PAK

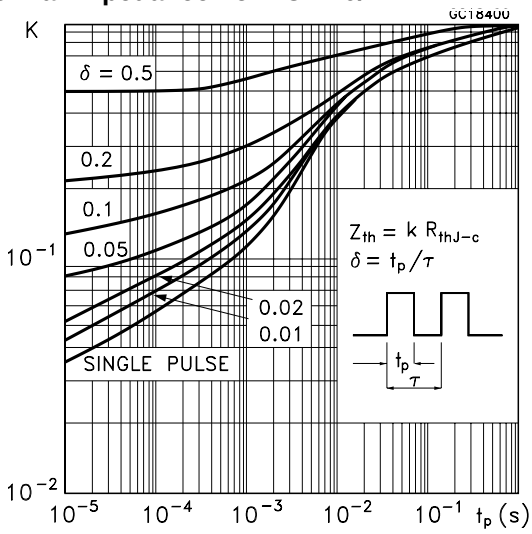

Safe Operating Area For TO-220FP

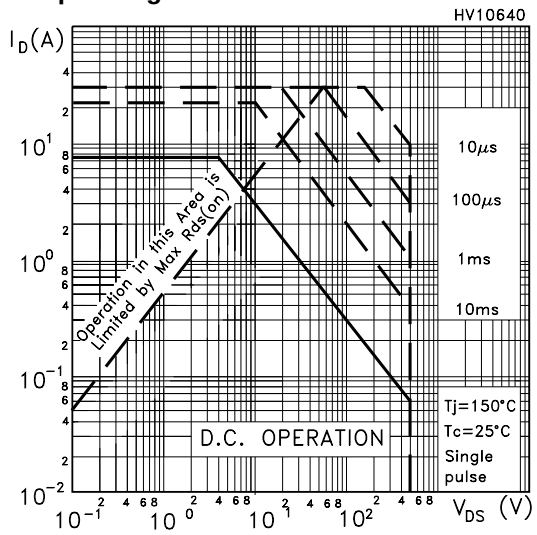

Thermal Impedance For TO-220FP

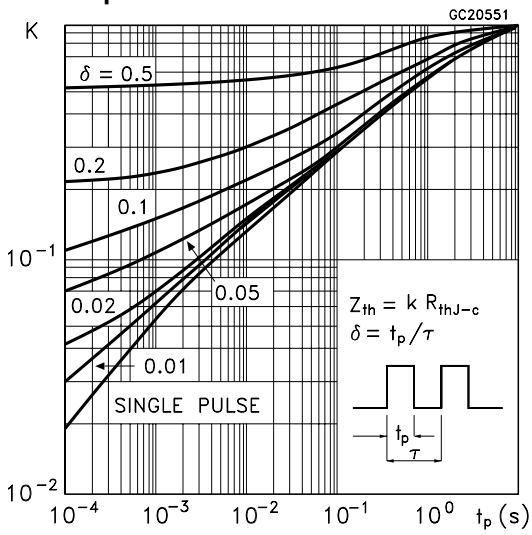

Output Characteristics

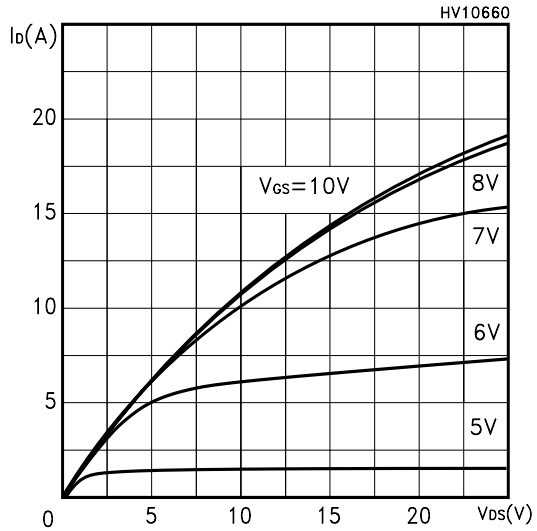

Transfer Characteristics

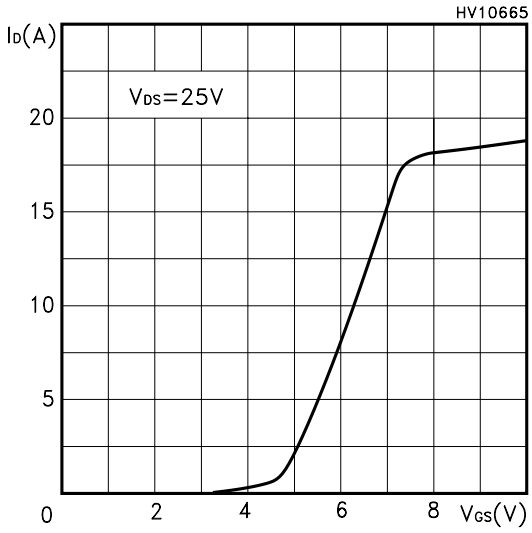

Transconductance

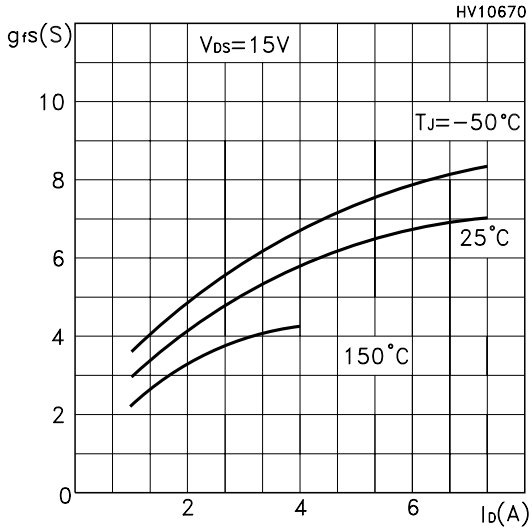

Static Drain-source On Resistance

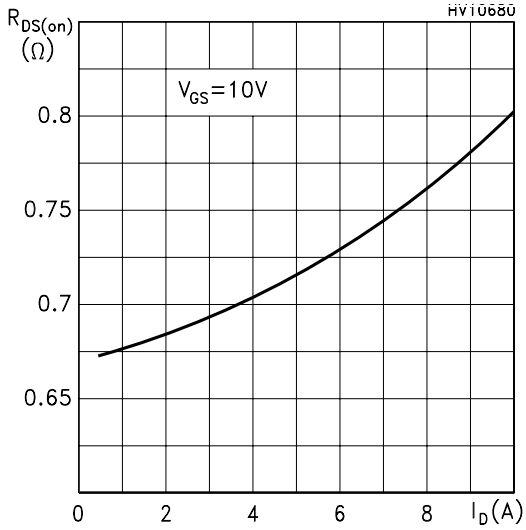

Gate Charge vs Gate-source Voltage

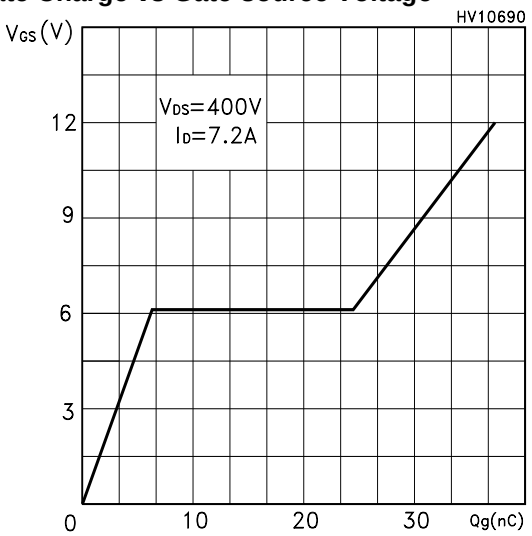

Capacitance Variations

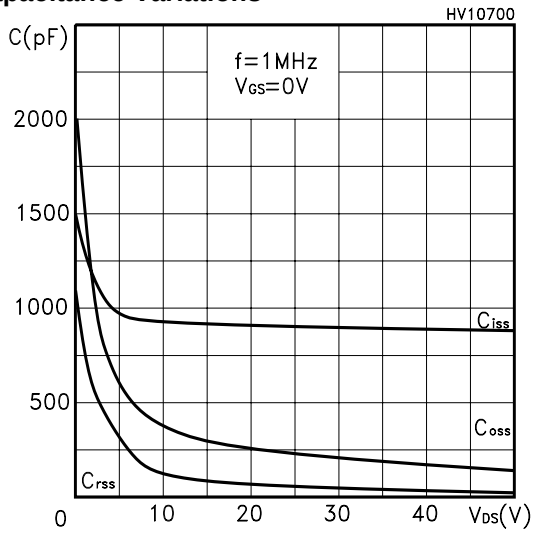

Normalized Gate Threshold Voltage vs Temp.

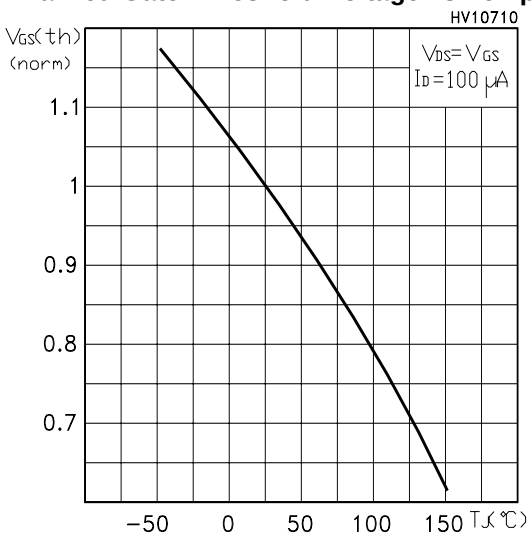

Normalized On Resistance vs Temperature

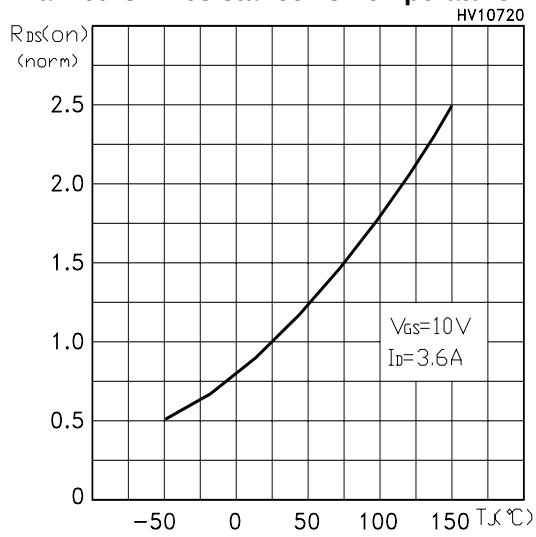

Source-drain Diode Forward Characteristics

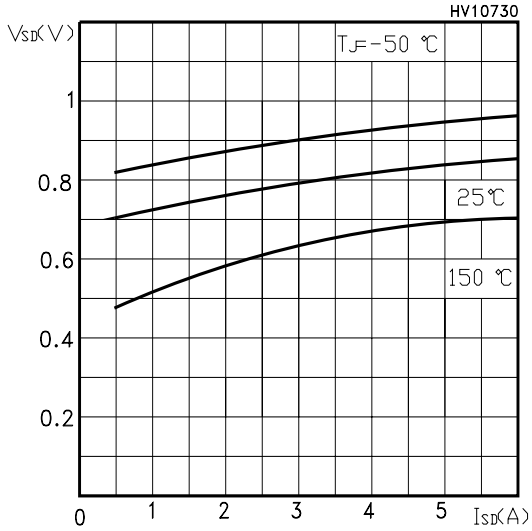

Normalized BVDSS vs Temperature

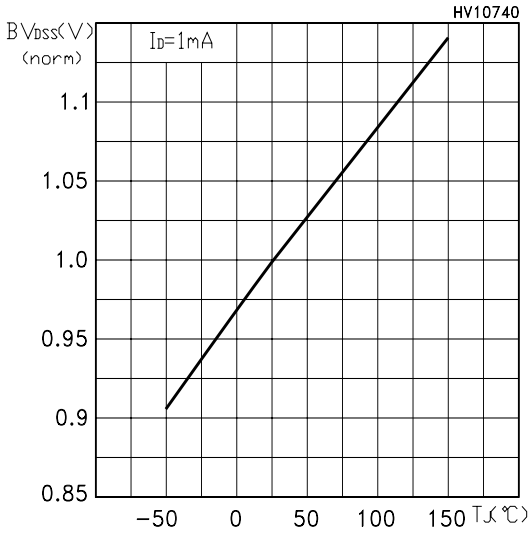

Maximum Avalanche Energy vs Temperature

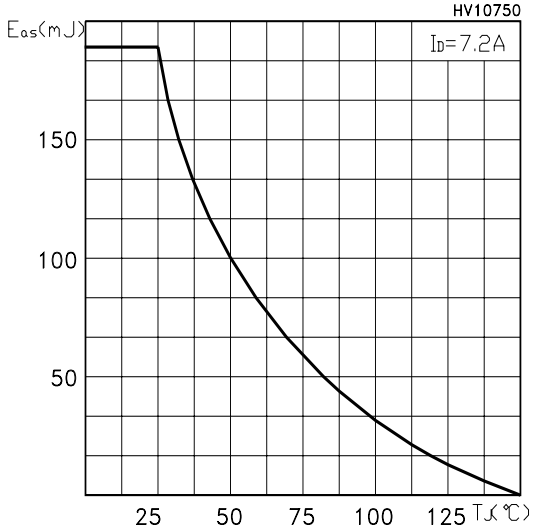

Fig. 1: Unclamped Inductive Load Test Circuit

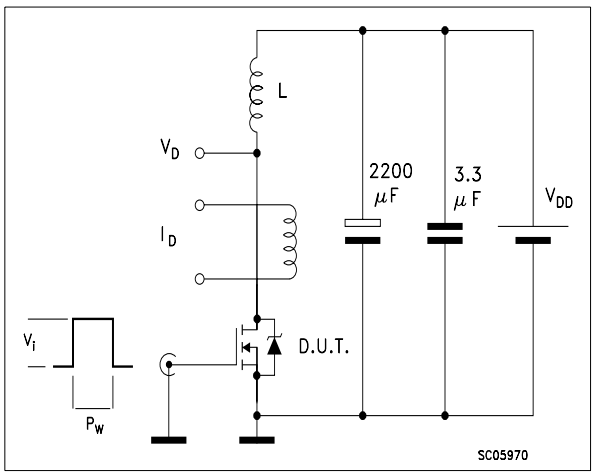

Fig. 2: Unclamped Inductive Waveform

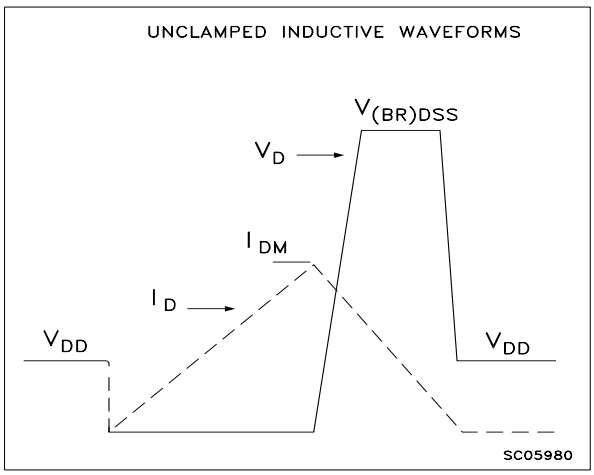

Fig. 3: Switching Times Test Circuit For Resistive Load

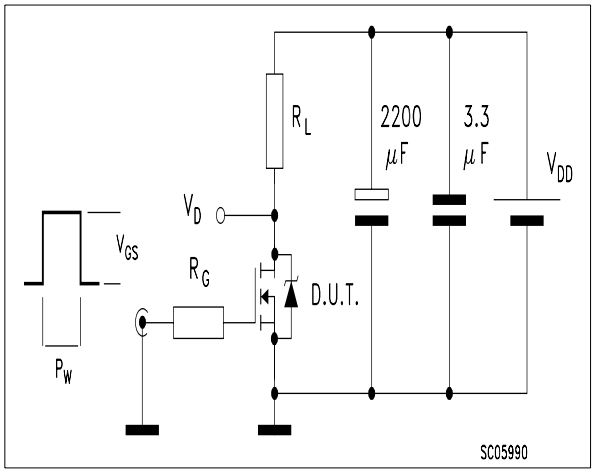

Fig. 4: Gate Charge test Circuit

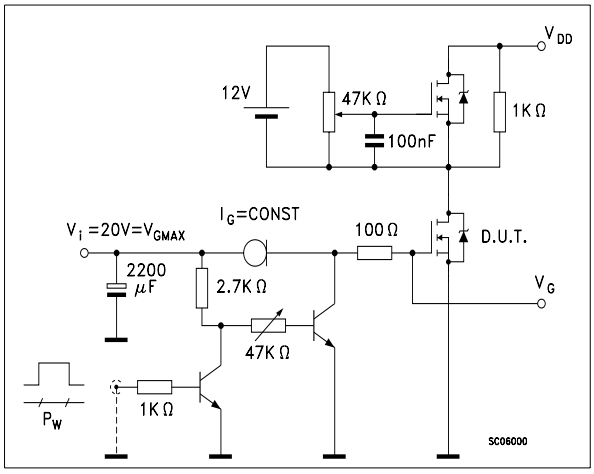

Fig. 5: Test Circuit For Inductive Load Switching And Diode Recovery Times

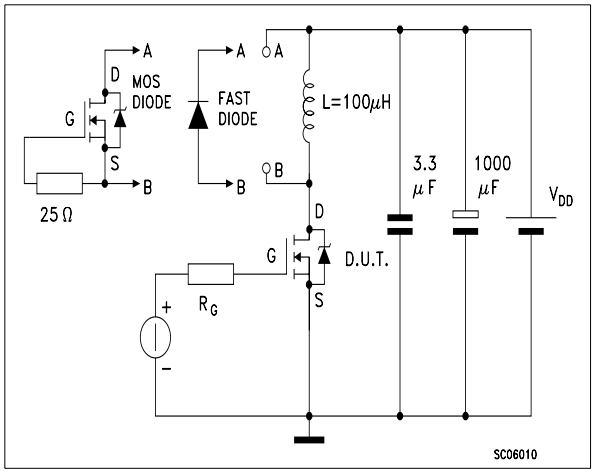

TO-220 MECHANICAL DATA

DIM.	mm			inch		
	MIN.	TYP.	MAX.	MIN.	TYP.	MAX.
A	4.40		4.60	0.173		0.181
C	1.23		1.32	0.048		0.051
D	2.40		2.72	0.094		0.107
D1		1.27			0.050	
E	0.49		0.70	0.019		0.027
F	0.61		0.88	0.024		0.034
F1	1.14		1.70	0.044		0.067
F2	1.14		1.70	0.044		0.067
G	4.95		5.15	0.194		0.203
G1	2.4		2.7	0.094		0.106
H2	10.0		10.40	0.393		0.409
L2		16.4			0.645	
L4	13.0		14.0	0.511		0.551
L5	2.65		2.95	0.104		0.116
L6	15.25		15.75	0.600		0.620
L7	6.2		6.6	0.244		0.260
L9	3.5		3.93	0.137		0.154
DIA.	3.75		3.85	0.147		0.151

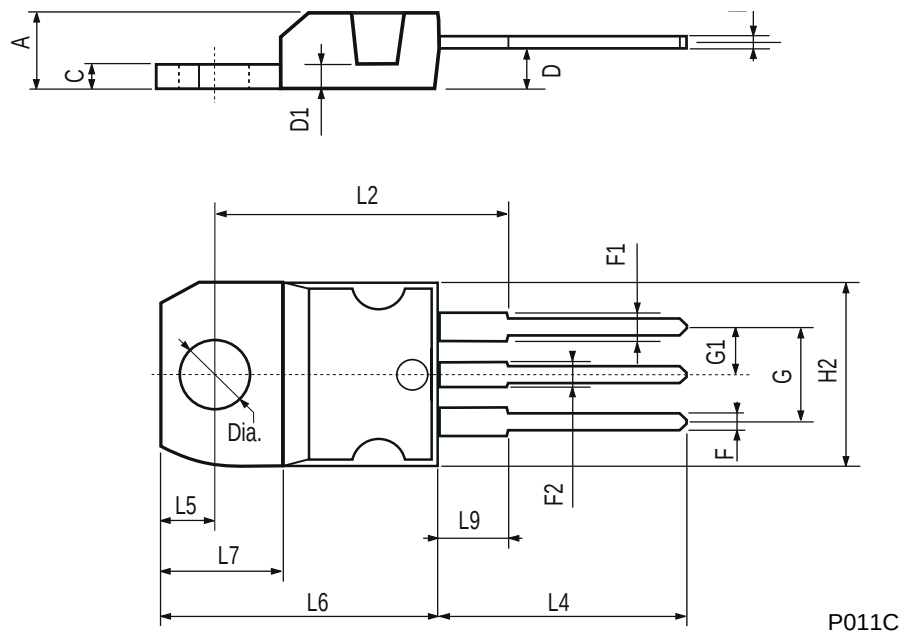

TO-220FP MECHANICAL DATA

DIM.	mm.			inch		
	MIN.	TYP	MAX.	MIN.	TYP.	MAX.
A	4.4		4.6	0.173		0.181
B	2.5		2.7	0.098		0.106
D	2.5		2.75	0.098		0.108
E	0.45		0.7	0.017		0.027
F	0.75		1	0.030		0.039
F1	1.15		1.5	0.045		0.067
F2	1.15		1.5	0.045		0.067
G	4.95		5.2	0.195		0.204
G1	2.4		2.7	0.094		0.106
H	10		10.4	0.393		0.409
L2		16			0.630	
L3	28.6		30.6	1.126		1.204
L4	9.8		10.6	.0385		0.417
L5	2.9		3.6	0.114		0.141
L6	15.9		16.4	0.626		0.645
L7	9		9.3	0.354		0.366
Ø	3		3.2	0.118		0.126

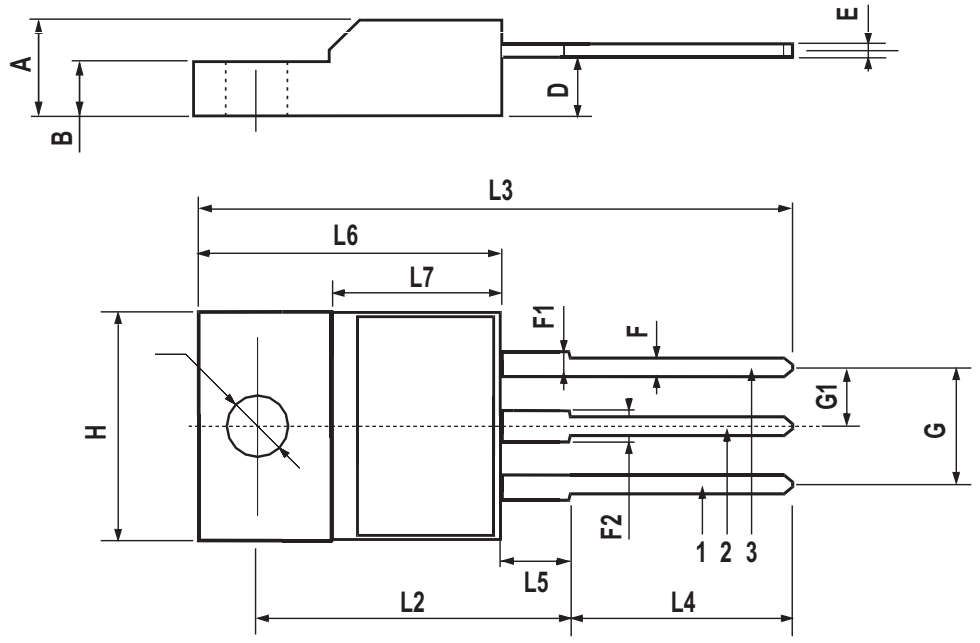

D^2PAK MECHANICAL DATA

DIM.	mm.			inch		
	MIN.	TYP	MAX.	MIN.	TYP.	MAX.
A	4.4		4.6	0.173		0.181
A1	2.49		2.69	0.098		0.106
A2	0.03		0.23	0.001		0.009
B	0.7		0.93	0.027		0.036
B2	1.14		1.7	0.044		0.067
C	0.45		0.6	0.017		0.023
C2	1.23		1.36	0.048		0.053
D	8.95		9.35	0.352		0.368
D1		8			0.315	
E	10		10.4	0.393		
E1		8.5			0.334	
G	4.88		5.28	0.192		0.208
L	15		15.85	0.590		0.625
L2	1.27		1.4	0.050		0.055
L3	1.4		1.75	0.055		0.068
M	2.4		3.2	0.094		0.126
R		0.4			0.015	
V2	0º		8º			

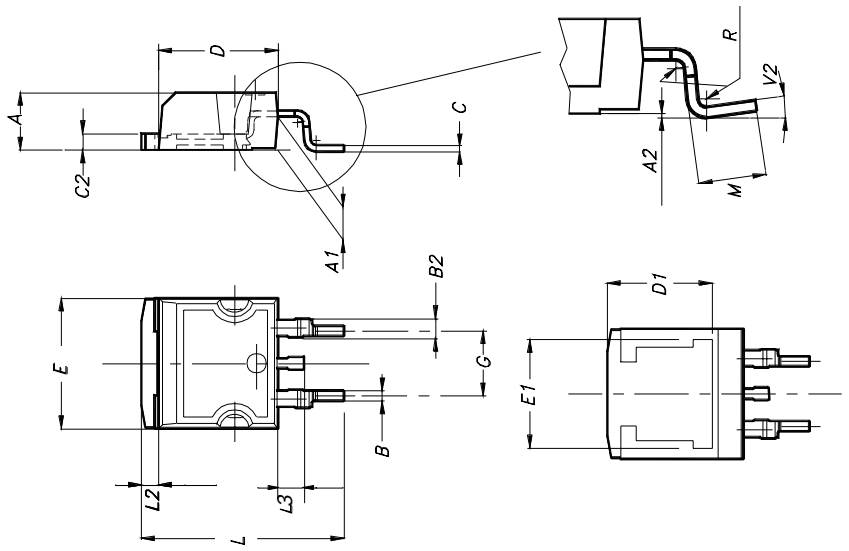

D^2PAK FOOTPRINT

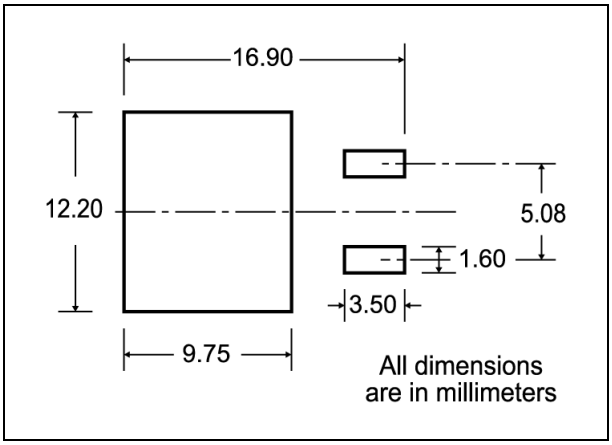

TUBE SHIPMENT (no suffix)*

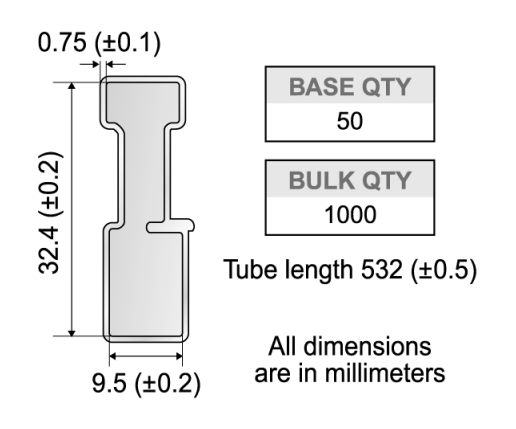

TAPE AND REEL SHIPMENT (suffix "T4")*

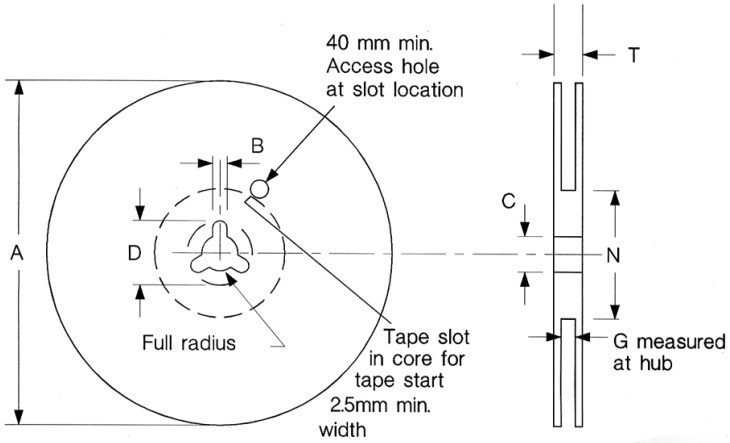

REEL MECHANICAL DATA

DIM.	mm		inch	
	MIN.	MAX.	MIN.	MAX.
A		330		12.992
B	1.5		0.059	
C	12.8	13.2	0.504	0.520
D	20.2		0795	
G	24.4	26.4	0.960	1.039
N	100		3.937	
T		30.4		1.197

BASE QTY	BULK QTY
1000	1000

TAPE MECHANICAL DATA

DIM.	mm		inch	
	MIN.	MAX.	MIN.	MAX.
A0	10.5	10.7	0.413	0.421
B0	15.7	15.9	0.618	0.626
D	1.5	1.6	0.059	0.063
D1	1.59	1.61	0.062	0.063
E	1.65	1.85	0.065	0.073
F	11.4	11.6	0.449	0.456
K0	4.8	5.0	0.189	0.197
P0	3.9	4.1	0.153	0.161
P1	11.9	12.1	0.468	0.476
P2	1.9	2.1	0.075	0.082
R	50		1.574	
T	0.25	0.35	0.0098	0.0137
W	23.7	24.3	0.933	0.956

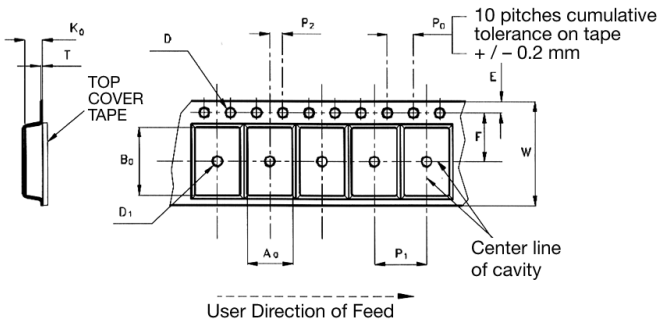

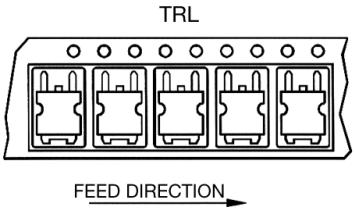

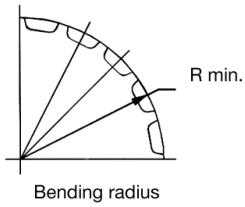

* on sales type

Information furnished is believed to be accurate and reliable. However, STMicroelectronics assumes no responsibility for the consequences of use of such information nor for any infringement of patents or other rights of third parties which may result from its use. No license is granted by implication or otherwise under any patent or patent rights of STMicroelectronics. Specifications mentioned in this publication are subject to change without notice. This publication supersedes and replaces all information previously supplied. STMicroelectronics products are not authorized for use as critical components in life support devices or systems without express written approval of STMicroelectronics.

© The ST logo is a registered trademark of STMicroelectronics

© 2002 STMicroelectronics - Printed in Italy - All Rights Reserved
STMicroelectronics GROUP OF COMPANIES
Australia - Brazil - Canada - China - Finland - France - Germany - Hong Kong - India - Israel - Italy - Japan - Malaysia - Malta - Morocco
Singapore - Spain - Sweden - Switzerland - United Kingdom - United States.
© http://www.st.com

This datasheet has been download from:

www.datasheetcatalog.com

Datasheets for electronics components.