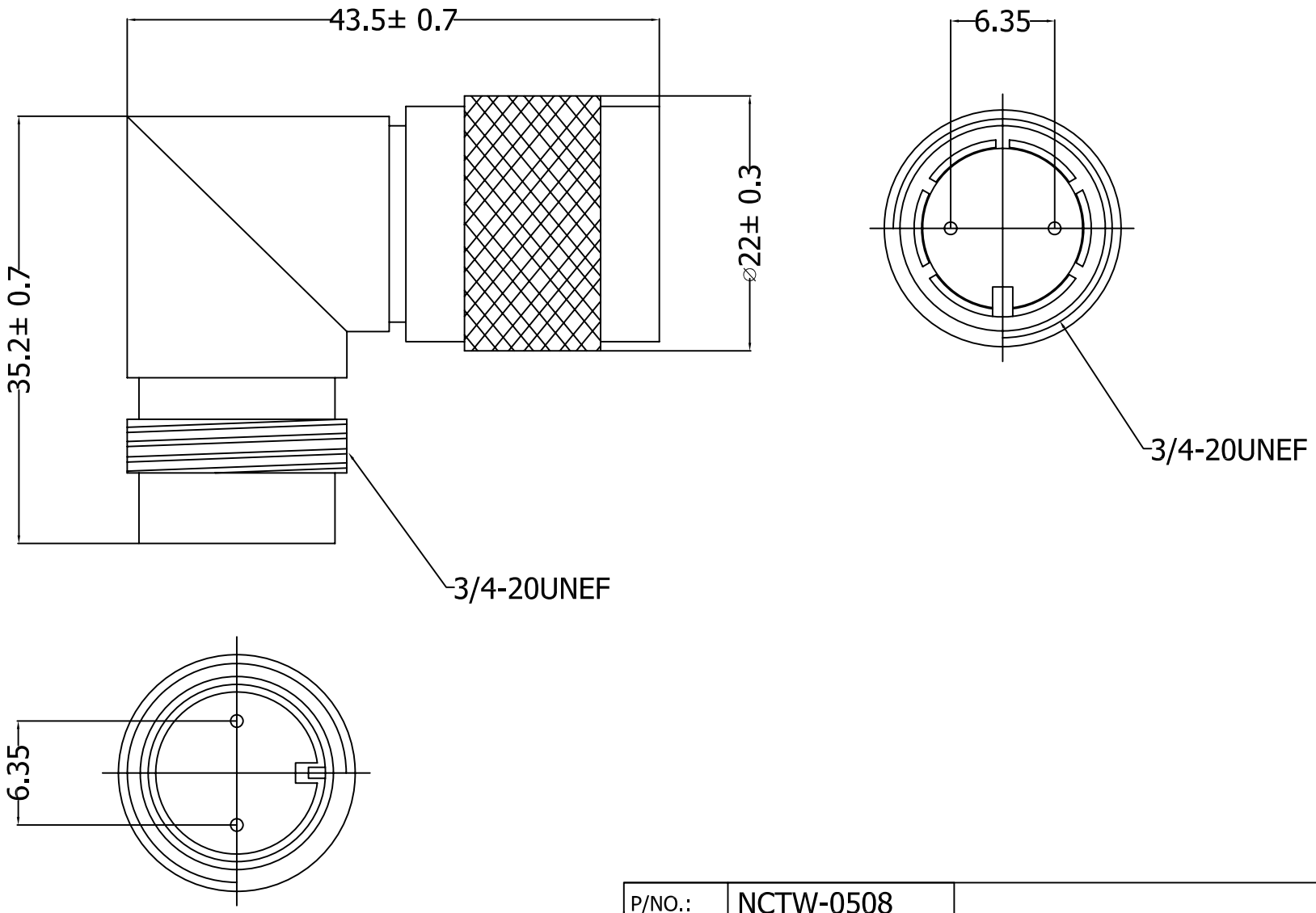

P/NO.:	NCTW-0508				NEW CENTRESS INTERNATIONAL CO., LTD.		
CUSTOMER:	CHIP & DIP						
CUST. P/N.:	GTW-508						
APP.	Eric	UNITS	m/m				
1.0	NEW DRAWING	2008/12/24	CHK.	Carmen	DATE	2008/12/24	DES.: TWINAX L TYPE, MALE TO FEMALE
VER.NO.	DESCRIPTION	DATE	DRAW.	Christina	SHEET	1/1	DRAW NO.: NCTW-0508 VER 1.0