CRYSTAL OSCILLATOR

PROGRAMMABLE

OUTPUT : CMOS

SG - 8002 series

- Frequency range : 1 MHz to 125 MHz
- Supply voltage : 3.0 V / 3.3 V / 5.0 V
- Function : Output enable(OE) or Standby($\overline{ST}$)

- Short mass production lead time by PLL technology.
- SG-Writer available to purchase, please contact Epson or local sales representative.

Pb Free RoHS Compliant

Product Number (please contact us)

CE, LB, CA

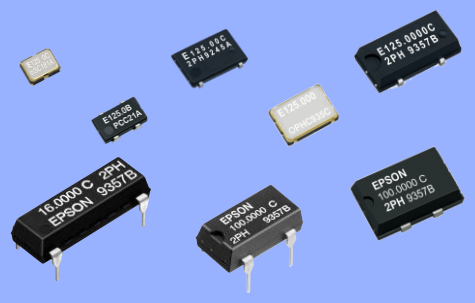

Specifications (characteristics)

Item	Symbol	Specifications *2			Conditions / Remarks
		PT / ST	PH / SH	PC / SC	
Output frequency range	f0	1 MHz to 125 MHz		—	VCC = 4.5 V to 5.5 V (except SG-8002LB)
		—	1 MHz to 80 MHz	—	VCC = 4.5 V to 5.5 V (SG-8002LB only)
		—	—	1 MHz to 125 MHz	VCC = 3.0 V to 3.6 V
		—	—	1 MHz to 66.7 MHz	VCC = 2.7 V to 3.6 V
Supply voltage	VCC	4.5 V to 5.5 V		2.7 V to 3.6 V	
Storage temperature	T_stg	-55 °C to +125 °C (SG-8002CA / JF / JA / DC / DB)			Storage as single product.
		-55 °C to +100 °C (SG-8002JC)			
		-40 °C to +125 °C (SG-8002CE / LB)			
Operating temperature*1	T_use	-20 °C to +70 °C / -40 °C to +85 °C			
Frequency tolerance	f_tol	B: ±50 × 10^{-6}, C: ±100 × 10^{-6}			-20 °C to +70 °C
		M: ±100 × 10^{-6}		M: ±100 × 10^{-6}	-40 °C to +85 °C (except SG-8002JC) *3
		—	L:±50 × 10^{-6}	L:±50 × 10^{-6}	-40 °C to +85 °C (SG-8002LB only) *3
Current consumption	ICC	40 mA Max. (SG-8002CE)		28 mA Max.	No load condition, Max. frequency
		—	30 mA Max. (SG-8002LB)		
		45 mA Max. (SG-8002CA / JF /JC / JA / DC / DB)			
Output disable current	I_dis	30 mA Max.		16 mA Max.	OE=GND (PT.PH,PC) (except SG-8002LB)
		—	25 mA Max.	16 mA Max.	OE=GND (PH,PC) (SG-8002LB only)
Stand-by current	I_std	50 µA Max.			$\overline{ST}$ =GND (ST,SH,SC)
Symmetry *1	SYM	40 % to 60 %	—		TTL load: 1.4 V, Max. load condition (except SG-8002LB)
		—	40 % to 60 %		CMOS load:50 % VCC level, Max. load condition (except SG-8002LB)
		—	40 % to 60 %	—	50 % VCC, L_CMOS=15 pF, ≤80 MHz (SG-8002LB)
		—	—	40 % to 60 %	50 % VCC, L_CMOS=15 pF, VCC=3.0 V to 3.6 V, ≤125 MHz (SG-8002LB)
		—	—	40 % to 60 %	50 % VCC, L_CMOS=15 pF, VCC=2.7 V to 3.6 V, ≤66.7 MHz (SG-8002LB)
		45 % to 55 %			*1
High output voltage	VOH	VCC -0.4 V Min.			IOH=-16 mA (PT,ST,PH,SH) , -8 mA (PC,SC)
Low output voltage	VOL	0.4 V Max.			IOL=16 mA (PT,ST,PH,SH) , 8 mA (PC,SC)
Output load condition (TTL) *1	L_TTL	5 TTL Max.	—		Max. frequency and Max. Supply voltage (SG-8002CE / CA / JA / DC / DB)
		5 TTL Max.	—		f0 ≤ 90 MHz and Max. Supply voltage (SG-8002JF / JC)
Output load condition (CMOS) *1	L_CMOS	15 pF Max.			Max. frequency and Max. Supply voltage (SG-8002CE / JF / JC)
		—	15 pF Max.		Max. frequency and Max. Supply voltage (SG-8002LB)
		15 pF Max.	25 pF Max	15 pF Max.	Max. frequency and Max. Supply voltage (SG-8002CA / JA / DC / DB)
Output enable / disable input voltage	VIH	2.0 V Min.		70 % VCC Min.	OE terminal or $\overline{ST}$ terminal
	VIL	0.8 V Max.		20 % VCC Max.	
Rise / Fall time *1	tr/ tf	4 ns Max.	—		TTL load: 0.4 V to 2.4 V level (except SG-8002LB)
		—	3 ns Max.		CMOS load: 20 % VCC to 80 % VCC level
Start-up time	t_str	10 ms Max.			Time at minimum supply voltage to be 0 s
Frequency aging	f_aging	±5 × 10^{-6} / year Max.			+25 °C, VCC=5.0 V/ 3.3 V (PC,SC) First year

*1 Please refer to “Outline specifications” page for information regarding; operating temperature, available frequencies, symmetry, output load conditions and rise/fall time.

*2 Please refer to “Jitter specifications and characteristics chart” page for PLL-PLL connection & Jitter specification.

*3 Please refer to “Outline specifications” for availability of tolerance “M” and ”L”. A “Frequency checking” program on the Seiko Epson website is also available.

External dimensions and Recommended footprint (Unit:mm)

SG-8002CE Ceramic SON 4pin 3.2x2.5x1.05 mm

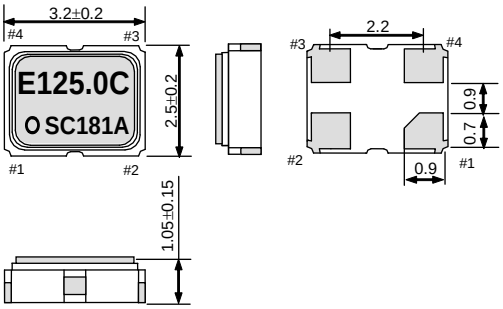

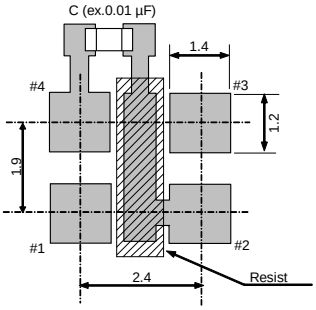

SG-8002LB SOJ 4pin 5.0x3.2x1.2 mm

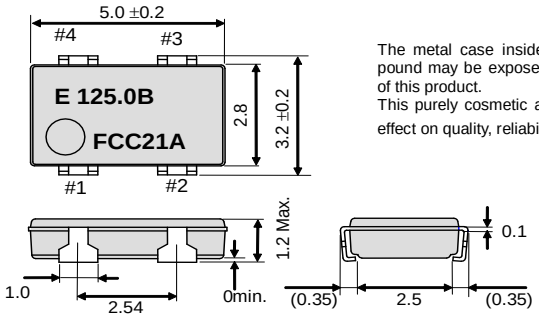

The metal case inside of the molding compound may be exposed on the top or bottom of this product.
This purely cosmetic and does not have any effect on quality, reliability or electrical specs.

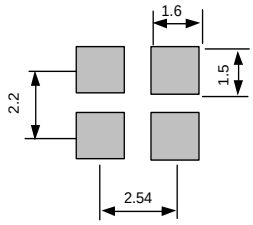

SG-8002CA Ceramic SON 4pin 7.0x5.0x1.4 mm

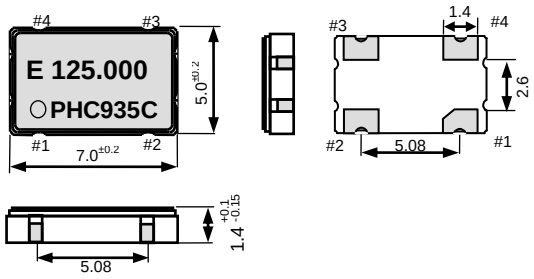

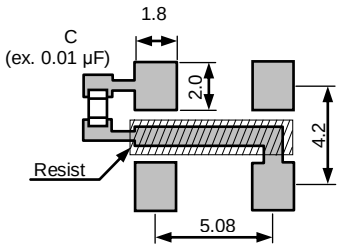

SG-8002JF SOJ 4pin 7.1x5.1x1.5 mm

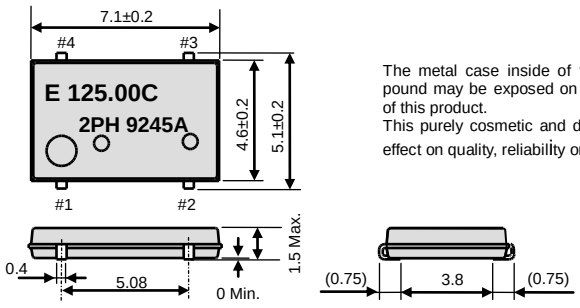

The metal case inside of the molding compound may be exposed on the top or bottom of this product.
This purely cosmetic and does not have any effect on quality, reliability or electrical specs.

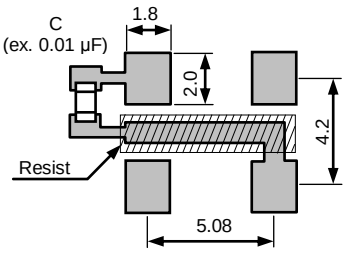

Note.
OE Pin (PT, PH, PC)
OE Pin = "H" or "open": Specified frequency output.
OE Pin = "L": Output is high impedance.

$\overline{ST}$ Pin (ST, SH, SC)
$\overline{ST}$ Pin = "H" or "open": Specified frequency output.
$\overline{ST}$ Pin = "L": Output is low level (weak pull - down), oscillation stops.

Pin map

Pin	Connection
1	OE or $\overline{ST}$
2	GND
3	OUT
4	Vcc

To maintain stable operation, provide a 0.01uF to 0.1uF by-pass capacitor at a location as near as possible to the power source terminal of the crystal product (between Vcc - GND).

External dimensions and Recommended footprint (Continued) (Unit:mm)

SG-8002JC **SOJ 4pin 10.5x5.8x2.7 mm** Package and pin compatible with SG-636.

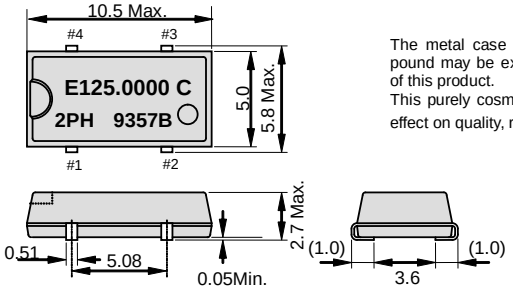

The metal case inside of the molding compound may be exposed on the top or bottom of this product.
This purely cosmetic and does not have any effect on quality, reliability or electrical specs.

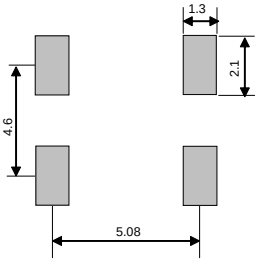

SG-8002JA **SOJ 4pin 14.0x9.8x4.7 mm** Package and pin compatible with SG-615.

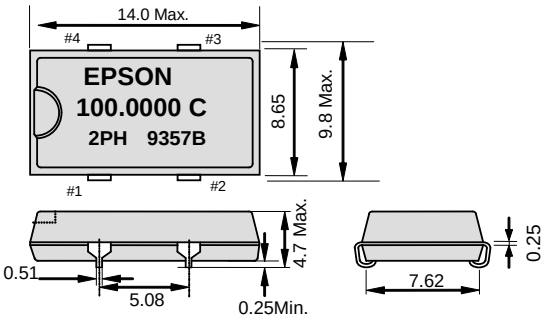

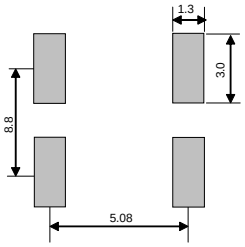

SG-8002DC **DIP half size**

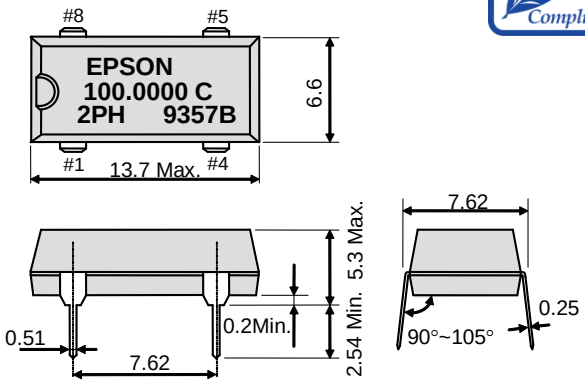

SG-8002DB **DIP full size**

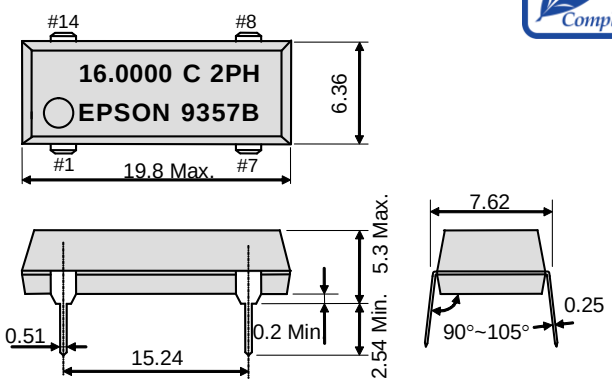

Note.
OE Pin (PT, PH, PC)
OE Pin = "H" or "open": Specified frequency output.
OE Pin = "L": Output is high impedance.

$\overline{ST}$ Pin (ST, SH, SC)
$\overline{ST}$ Pin = "H" or "open": Specified frequency output.
$\overline{ST}$ Pin = "L": Output is low level (weak pull - down), oscillation stops.

Pin map

Pin	Connection
1	OE or $\overline{ST}$
2	GND
3	OUT
4	Vcc

Pin map: SG-8002DC

Pin	Connection
1	OE or $\overline{ST}$
4	GND
5	OUT
8	Vcc

Pin map: SG-8002DB

Pin	Connection
1	OE or $\overline{ST}$
7	GND
8	OUT
14	Vcc

To maintain stable operation, provide a 0.01uF to 0.1uF by-pass capacitor at a location as near as possible to the power source terminal of the crystal product (between Vcc - GND).

Products number

(Please contact us for each product.)

SG-8002CE:	Q3321CExxxxxx00	SG-8002JC:	Q3307JCx2xxxx00
SG-8002LB:	Q3323LBxxxxxx00	SG-8002JA:	Q3306JAx2xxxx00
SG-8002CA:	Q3309CAx0xxxx00	SG-8002DC:	Q3204DCx2xxxx00
SG-8002JF:	Q3308JFx2xxxx00	SG-8002DB:	Q3203DBx2xxxx00

SG-8002 Series Outline of specifications

Model		Supply voltage	Operating temperature	Output load condition	Symmetry	Output rise time / Output fall time
SG-8002CE	PT/ST	4.5 V to 5.5 V	-20 °C to +70 °C	5TTL+15pF	40 % to 60 % (1.4 V, L_TTL=5 TTL+15 pF, f0≤125 MHz) 45 % to 55 % (1.4 V, L_TTL=5 TTL+15 pF, f0≤66.7 MHz)	2.0 ns Max. (0.8 V to 2.0 V,L_TTL=Max.) 4.0 ns Max. (0.4 V to 2.4 V,L_TTL=Max.)
			-40 °C to +85 °C		45 % to 55 % (1.4 V, L_TTL=5 TTL+15 pF, f0≤27.0 MHz)	
	PH/SH		-20 °C to +70 °C	15 pF (f0≤125 MHz) 25 pF (f0≤100 MHz)	40 % to 60 % (50 % VCC, L_CMOS=15 pF, f0≤125 MHz) 45 % to 55 % (50 % VCC, L_CMOS=25 pF, f0≤66.7 MHz)	3.0 ns Max. (20 % VCC to 80 % VCC,L_CMOS=Max.)
			-40 °C to +85 °C	25 pF (f0≤27 MHz)	45 % to 55 % (50 % VCC, L_CMOS=25 pF, f0≤27.0 MHz)	
	PC/SC	3.0 V to 3.6 V	-40 °C to +85 °C	15 pF	40 % to 60 % (50 % VCC, L_CMOS=15 pF, f0≤125 MHz) 45 % to 55 % (50 % VCC, L_CMOS=15 pF, f0≤40 MHz)	3.0 ns Max. (20 % VCC to 80 % VCC,L_CMOS=Max.)
		2.7 V to 3.6 V			40 % to 60 % (50 % VCC, L_CMOS=15 pF, f0≤66.7 MHz)	
SG-8002LB	PH/SH	4.5 V to 5.5 V	-40 °C to +85 °C	15 pF 25pF (f0≤50 MHz)	40 % to 60 % (50 % VCC, L_CMOS=15 pF, f0≤80 MHz) 45 % to 55 % (50 % VCC, L_CMOS=25 pF, f0≤50 MHz)	3.0 ns Max. (20 % VCC to 80 % VCC,L_CMOS=Max.)
	PC/SC	3.0 V to 3.6 V	-40 °C to +85 °C	15 pF	40 % to 60 % (50 % VCC, L_CMOS=15 pF, f0≤125 MHz) 45 % to 55 % (50 % VCC, L_CMOS=15 pF, f0≤40 MHz)	3.0 ns Max. (20 % VCC to 80 % VCC,L_CMOS=Max.)
		2.7 V to 3.6 V			40 % to 60 % (50 % VCC, L_CMOS=15 pF, f0≤66.7 MHz)	
SG-8002JF	PT/ST	4.5 V to 5.5 V	-20 °C to +70 °C	5TTL+15 pF (f0≤ 90 MHz) 15 pF (f0≤125 MHz) 25 pF (f0≤66.7 MHz)	40 % to 60 % (1.4 V, L_TTL=5 TTL+15 pF, f0≤90 MHz) ↑ (1.4 V, L_CMOS=15 pF, f0≤125 MHz) ↑ (1.4 V, L_CMOS=25 pF, f0≤66.7 MHz) 45 % to 55 % (1.4 V, L_TTL=5 TTL+15 pF, f0≤66.7 MHz)	2.0 ns Max. (0.8 V to 2.0 V,L_CMOS≤25pF) 4.0 ns Max. (0.4 V to 2.4 V,L_CMOS or L_TTL=Max.)
			-40 °C to +85 °C	15 pF (f0≤40 MHz)	40 % to 60 % (1.4 V, L_CMOS=15 pF, f0≤40 MHz)	
	PH/SH		-20 °C to +70 °C	15 pF (f0≤125 MHz) 25 pF (f0≤90 MHz) 50 pF (f0≤50 MHz)	40 % to 60 % (50 % VCC, L_CMOS=15 pF, f0≤125 MHz) ↑ (50 % VCC, L_CMOS=25 pF, f0≤90.0 MHz) ↑ (50 % VCC, L_CMOS=50 pF, f0≤50.0 MHz) 45 % to 55 % (50 % VCC, L_CMOS=25 pF, f0≤66.7 MHz)	3.0 ns Max. (20 % VCC to 80 % VCC,L_CMOS≤25pF) 4.0 ns Max. (20 % VCC to 80 % VCC,L_CMOS=Max.)
			-40 °C to +85 °C	15 pF (f0≤40 MHz)	40 % to 60 % (50 % VCC, L_CMOS=15 pF, f0≤40 MHz)	
	PC/SC	3.0 V to 3.6 V	-40 °C to +85 °C	15 pF 30 pF (f0≤40 MHz)	40 % to 60 % (50 % VCC, CL=15 pF, f0≤125 MHz) 45 % to 55 % (50 % VCC, CL=30 pF, f0≤40 MHz)	3.0 ns Max. (20 % VCC to 80 % VCC,L_CMOS≤15pF) 4.0 ns Max. (20 % VCC to 80 % VCC,L_CMOS=Max.)
		2.7 V to 3.6 V		15 pF	40 % to 60 % (50 % VCC, CL=15 pF, f0≤66.7 MHz)	
SG-8002CA SG-8002JA SG-8002DB SG-8002DC	PT/ST	4.5 V to 5.5 V	-20 °C to +70 °C	5TTL+15pF (f0≤125 MHz) 25 pF (f0≤66.7 MHz)	40 % to 60 % (1.4 V, L_TTL=5 TTL+15 pF, f0≤125 MHz) ↑ (1.4 V, L_CMOS=25 pF, f0≤66.7 MHz) 45 % to 55 % (1.4 V, L_TTL=5 TTL+15 pF, f0≤66.7 MHz)	2.0 ns Max. (0.8 V to 2.0 V,L_CMOS or L_TTL=Max.) 4.0 ns Max. (0.4 V to 2.4 V,L_CMOS or L_TTL=Max.)
			-40 °C to +85 °C	5 TTL+15 pF (f0≤40 MHz) 15 pF (f0≤55 MHz)	40 % to 60 % (1.4 V, L_CMOS=15 pF, f0≤55.0 MHz) 45 % to 55 % (1.4 V, L_TTL=5 TTL+15 pF, f0≤40.0 MHz)	
	PH/SH		-20 °C to +70 °C	25 pF (f0≤125 MHz) 50 pF (f0≤66.7 MHz)	40 % to 60 % (50 % VCC, L_CMOS=25 pF, f0≤125 MHz) ↑ (50 % VCC, L_CMOS=50 pF, f0≤66.7 MHz) 45 % to 55 % (50 % VCC, L_CMOS=25 pF, f0≤66.7 MHz)	3.0 ns Max. (20 % VCC to 80 % VCC,L_CMOS≤25pF) 4.0 ns Max. (20 % VCC to 80 % VCC,L_CMOS=Max.)
			-40 °C to +85 °C	15 pF (f0≤55 MHz) 25 pF (f0≤40 MHz)	40 % to 60 % (50 % VCC, L_CMOS=15 pF, f0≤55.0 MHz) 45 % to 55 % (50 % VCC, L_MOS=25 pF, f0≤40.0 MHz)	
	PC/SC	3.0 V to 3.6 V	-40 °C to +85 °C	15 pF 30 pF (f0≤40 MHz)	40 % to 60 % (50 % VCC, L_CMOS=15 pF, f0≤125 MHz) 45 % to 55 % (50 % VCC, L_CMOS=30 pF, f0≤40 MHz)	3.0 ns Max. (20 % VCC to 80 % VCC,L_CMOS≤15pF) 4.0 ns Max. (20 % VCC to 80 % VCC,L_CMOS=Max.)
		2.7 V to 3.6 V		15 pF	40 % to 60 % (50 % VCC, L_CMOS=15 pF, f0≤66.7 MHz)	
SG-8002JC	PT/ST	4.5 V to 5.5 V	-20 °C to +70 °C	5TTL+15 pF (f0≤90 MHz) 15 pF (f0≤125 MHz) 25 pF (f0≤66.7 MHz)	40 % to 60 % (1.4 V,L_CMOS=15 pF, f0≤125 MHz) ↑ (1.4 V,L_TTL=5 TTL+15 pF, f0≤90.0 MHz) ↑ (1.4 V,L_CMOS=25 pF, f0≤66.7 MHz) 45 % to 55 % (1.4 V,L_TTL=5 TTL+15 pF, f0≤66.7 MHz)	2.0 ns Max. (0.8 V to 2.0 V,L_CMOS or L_TTL=Max.) 4.0 ns Max. (0.4 V to 2.4 V,L_CMOS or L_TTL=Max.)
	PH/SH			15 pF (f0≤125 MHz) 25 pF (f0≤90 MHz) 50 pF (f0≤66.7 MHz)	40 % to 60 % (50 % VCC, L_CMOS=15 pF, f0≤125 MHz) ↑ (50 % VCC, L_CMOS=25 pF, f0≤90 MHz) ↑ (50 % VCC, L_CMOS=50 pF, f0≤50 MHz) 45 % to 55 % (50 % VCC, L_CMOS=25 pF, f0≤66.7 MHz)	3.0 ns Max. (20 % VCC to 80 % VCC,L_CMOS≤25pF) 4.0 ns Max. (20 % VCC to 80 % VCC,L_CMOS=Max.)
	PC/SC	3.0 V to 3.6 V	-20 °C to +70 °C	15 pF 30 pF (f0≤40 MHz)	40 % to 60 % (50 % VCC, L_CMOS=15 pF, f0≤125 MHz) 45 % to 55 % (50 % VCC, L_CMOS=30 pF, f0≤40 MHz)	3.0 ns Max. (20 % VCC to 80 % VCC,L_CMOS≤15pF) 4.0 ns Max. (20 % VCC to 80 % VCC,L_CMOS=Max.)
		2.7 V to 3.6 V		15 pF	40 % to 60 % (50 % VCC, L_CMOS=15 pF, f0≤66.7 MHz)	

Product Name (Standard form)

SG-8002 CE 125.000000MHz S C C

① ② ③ ④⑤⑥

①Model ②Package type ③Frequency

④Function (P: Output enable, S:Standby)

⑤Supply voltage ⑥Frequency tolerance / Operating temperature

*As per table below.

⑤Supply voltage	
T,H	5.0 V Typ.
C	3.0 / 3.3 V Typ.

⑥Frequency tolerance / Operating temperature	
B	±50 × 10^{-6} / -20 to +70°C
C	±100 × 10^{-6} / -20 to +70°C
L	±50 × 10^{-6} / -40 to +85°C
M	±100 × 10^{-6} / -40 to +85°C

▶TABLE OF FREQUENCY RANGE*

Model(①, ②)	Function, Supply voltage(④, ⑤)	Supply voltage(⑤)	Frequency(③)	Frequency tolerance / Operating Temperature(⑥)
SG-8002CE	PT/ ST PH/ SH	4.5 V to 5.5 V	1.0 MHz to 125 MHz	B,C
			1.0 MHz to 27 MHz	M
	PC/SC	3.0 V to 3.6 V	1.0 MHz to 125 MHz	B,C,M
		2.7 V to 3.6 V	1.0 MHz to 66.7 MHz	
SG-8002LB	PH/ SH	4.5 V to 5.5 V	1.0 MHz to 80 MHz	B,C
			1.0 MHz to 27 MHz	M,L
	PC/ SC	3.0 V to 3.6 V	1.0 MHz to 125 MHz	B,C,M,L
		2.7 V to 3.6 V	1.0 MHz to 66.7 MHz	
SG-8002JF	PT/ ST PH/ SH	4.5 V to 5.5 V	1.0 MHz to 125 MHz	B,C
			1.0 MHz to 40 MHz	M
	PC/ SC	3.0 V to 3.6 V	1.0 MHz to 125 MHz	B,C,M
		2.7 V to 3.6 V	1.0 MHz to 66.7 MHz	
SG-8002CA SG-8002JA SG-8002DB SG-8002DC	PT/ ST PH/ SH	4.5 V to 5.5 V	1.0 MHz to 125 MHz	B,C
			1.0 MHz to 55 MHz	M
	PC/ SC	3.0 V to 3.6 V	1.0 MHz to 125 MHz	B,C,M
		2.7 V to 3.6 V	1.0 MHz to 66.7 MHz	
SG-8002JC	PT/ ST PH/ SH	4.5 V to 5.5 V	1.0 MHz to 125 MHz	B,C
	PC/ SC	3.0 V to 3.6 V	1.0 MHz to 125 MHz	B,C
		2.7 V to 3.6 V	1.0 MHz to 66.7 MHz	

SG-8002 series Jitter specifications and characteristics chart

■PLL-PLL connection

The SG-8002 series contains a PLL circuit and there are a few cases where the jitter value may be increased when this product is connected to another PLL oscillator (cascading connection). We do not recommend this series for analog video clock use and telecommunication synchronization. Please check in advance if the SG-8002 series jitter is acceptable to your application. (Jitter specification of the SG-8002 series is max.250 ps/CL=15 pF)

Jitter Specifications

Model	Supply Voltage	Jitter Item	Specifications	Remarks
PT / PH ST / SH	5.0 V ±0.5 V	Cycle to cycle	150 ps Max.	33 MHz ≤ f0 ≤ 125 MHz, L_CMOS=15 pF
			200 ps Max.	1.0 MHz ≤ f0 < 33 MHz, L_CMOS=15 pF
		Peak to peak	200 ps Max.	33 MHz ≤ f0 ≤ 125 MHz, L_CMOS=15 pF
			250 ps Max.	1.0 MHz ≤ f0 < 33 MHz, L_CMOS=15 pF
SC / PC	3.3 V ±0.3 V	Cycle to cycle	200 ps Max.	1.0 MHz ≤ f0 ≤ 125 MHz, L_CMOS=15 pF
		Peak to peak	250 ps Max.	1.0 MHz ≤ f0 ≤ 125 MHz, L_CMOS=15 pF

■Remarks on noise management for power supply line

It is not recommended to insert filters or other devices in the power supply line as a counter measure for EMI noise reduction. This may cause high-frequency impedance of the power supply line and negatively affect stable oscillation. When using this measure please evaluate the circuitry and device behavior in the circuit to verify and effects on oscillation. Start up time (0 % Vcc to 90 % Vcc) of power source should be more than 150 μs.

■SG-8002 series Characteristics chart

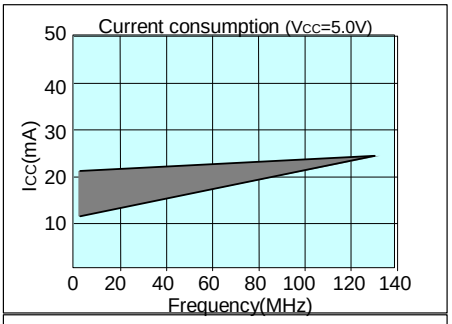

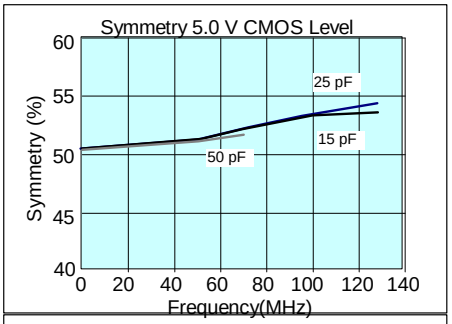

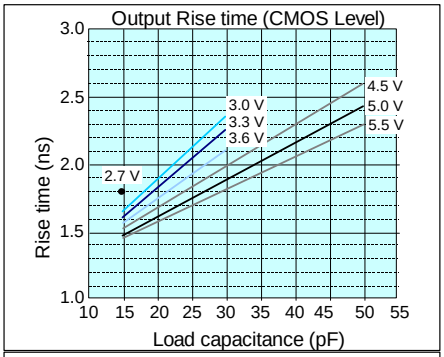

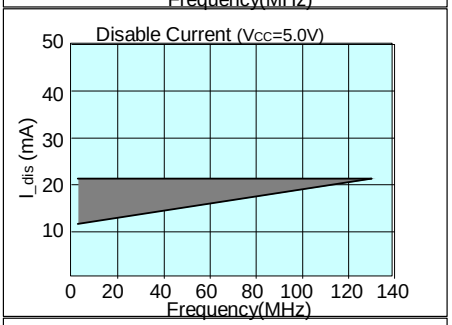

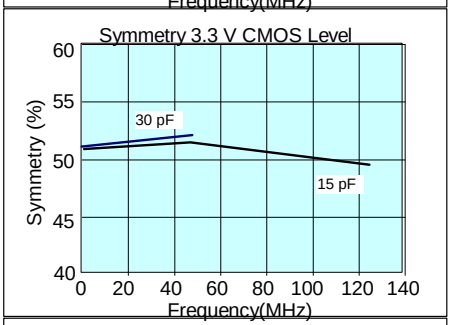

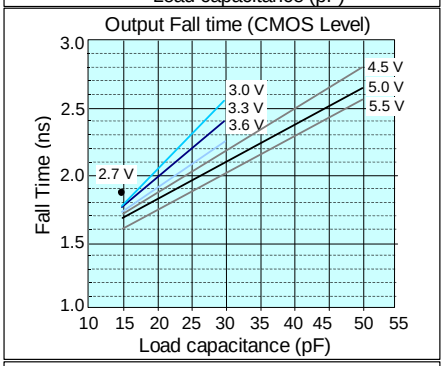

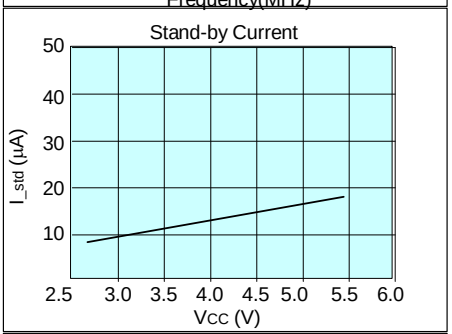

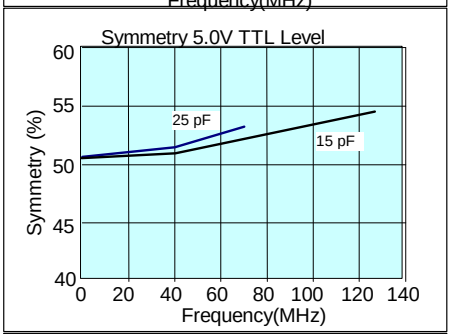

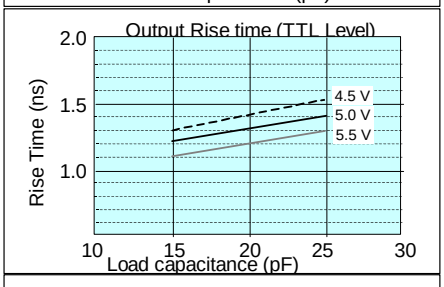

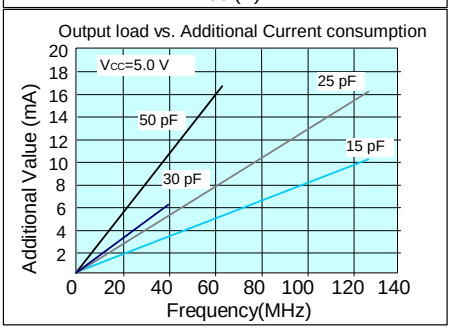

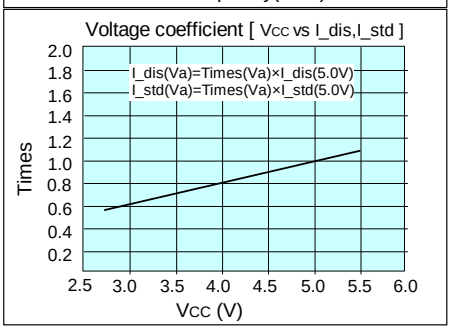

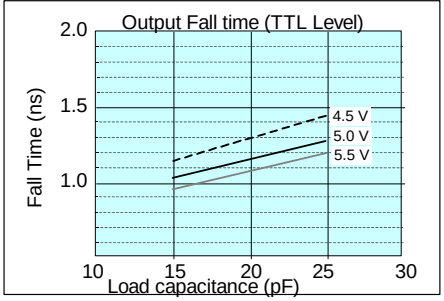

Mouser Electronics

Authorized Distributor

Click to View Pricing, Inventory, Delivery & Lifecycle Information:

Epson:
SG-8002JC 44.9000M-PCCL3:RoHS